NOTE		
SL. NO.	NOTE	DESCRIPTION
1	☐	INDICATES INSPECTION DIMENSION

REVISION HISTORY			
REV	DESCRIPTION	DATE	APPROVE

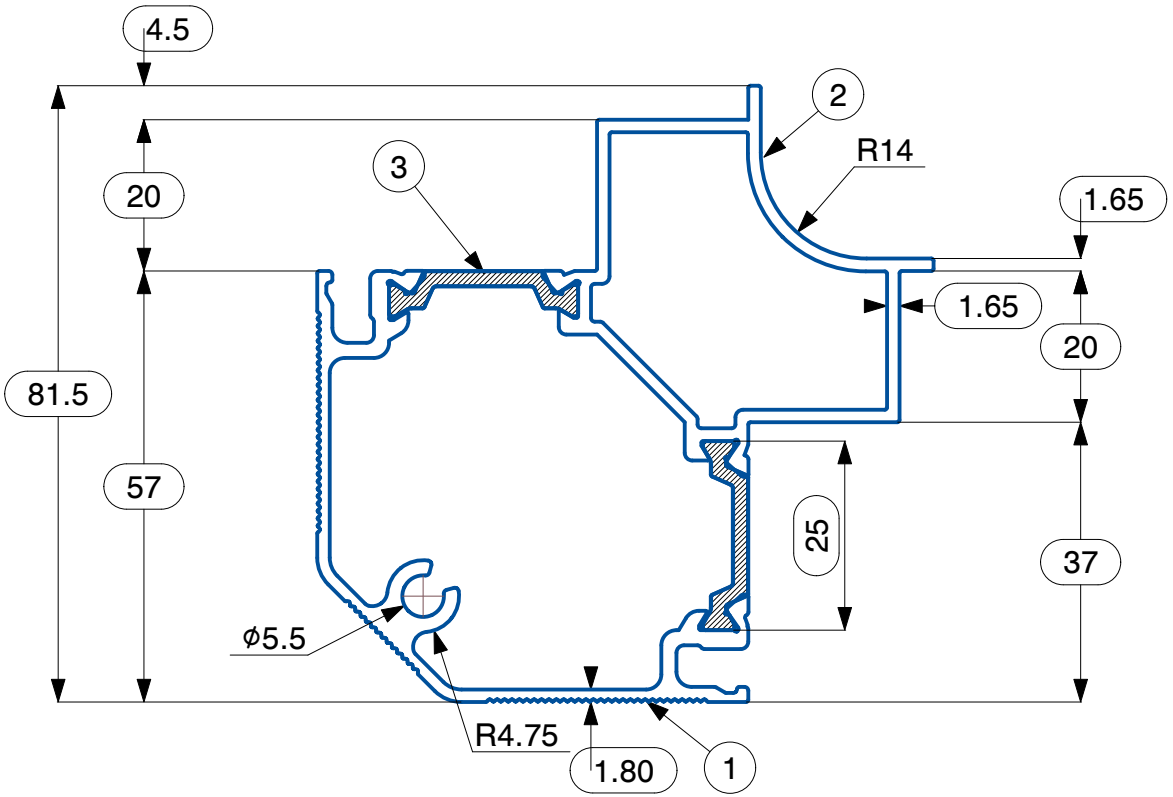

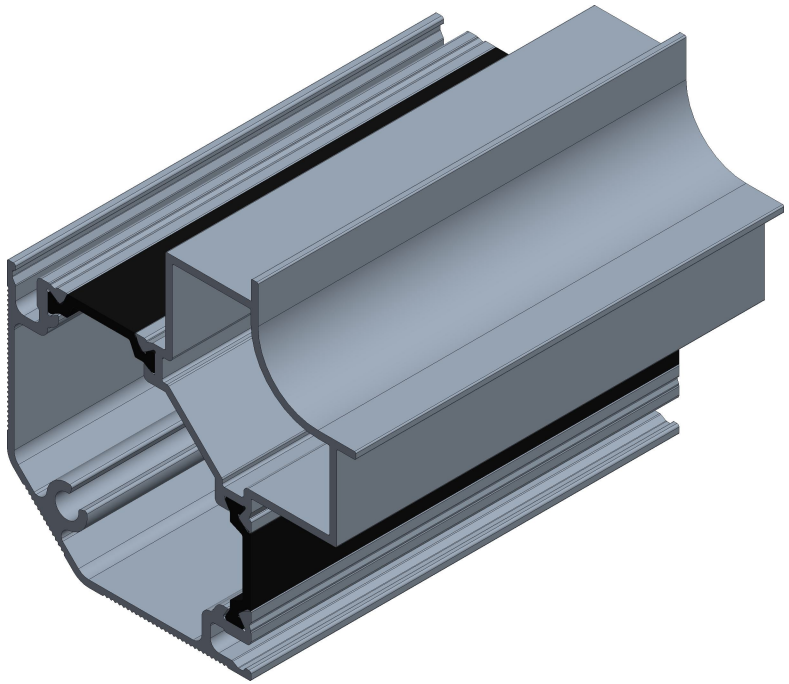

TOLERANCE #	
0.5 ~ < 10	±0.30
10 ~ < 25	±0.50
25 ~ < 50	±0.70
50 ~ < 100	±1.00
100 ~ < 150	±1.20

APPROVALS		DATE
DRAWN	VISWA	22-01-2026
CHECKED	KALEEL	22-01-2026
APPROVED		

MATERIAL: EN AW 6063 - T6

FINISH : MILL (Unless specified)
Based on customer request on finish, below is applicable
FOR ANODIZED : 5-10 MICRONS
FOR POWDER COATED : 60-100 MICRONS

THE MAXIMUM ALLOWABLE DEVIATION FOR ANY ANGLE IS ± 2°

TWIST ALONG THE LENGTH = 3 mm/M

STRAIGHTNESS = 5 mm/M

PERIMETER:
Ext : 328.53 mm
Int : -

AREA: 741.80 mm²

VIVANT SOLUTIONS

VIVANT SOLUTIONS PRIVATE LIMITED,
PLOT NO: 329, SIDCO THIRUMULLAIVOYAL,
CHENNAI, TAMILNADU, INDIA

TITLE : THERMAL BREAK SERATION CORNER PROFILE ASSEMBLY FOR 57-57-SF-SR SYSTEM

PART CODE : TBALC-57-57-SF-SR

NAME	DESCRIPTION	PART NO.	CODE
3	57-57-SF-SR THEMAL BREAK POLY 25-C	VSPL/AHU/1025	TBPL-25-C
2	57-57-SF-SR THERMAL BREAK SERATION CORNER INNER	VSPL/AHU/5094	TBALCI-57-57-SF-SR
1	57-57-SF-SR THERMAL BREAK SERATION CORNER OUTER	VSPL/AHU/5186	TBALCO-57-57-SF-SR

FLATNESS : 0.008 X WIDTH

SCALE : 1:1

CORNER & FILLET RADII :
<5 - ±0.5mm
>5 - ± 10%

CUT LENGTH: 6000 (±10) mm

WEIGHT RANGE : 1.69 - 1.99 Kg/m

ALL DIMENSIONS ARE IN mm (MILLIMETERS) UNTILL UNLESS SPECIFIED

THIRD ANGLE PROJECTION

SIZE : A4

RIBS :
B = -

REFERENCE STANDARDS - BSEN-755-9-2008

REV : 0

NOTE		
SL. NO.	NOTE	DESCRIPTION
1	☐	INDICATES INSPECTION DIMENSION

REVISION HISTORY			
REV	DESCRIPTION	DATE	APPROVE

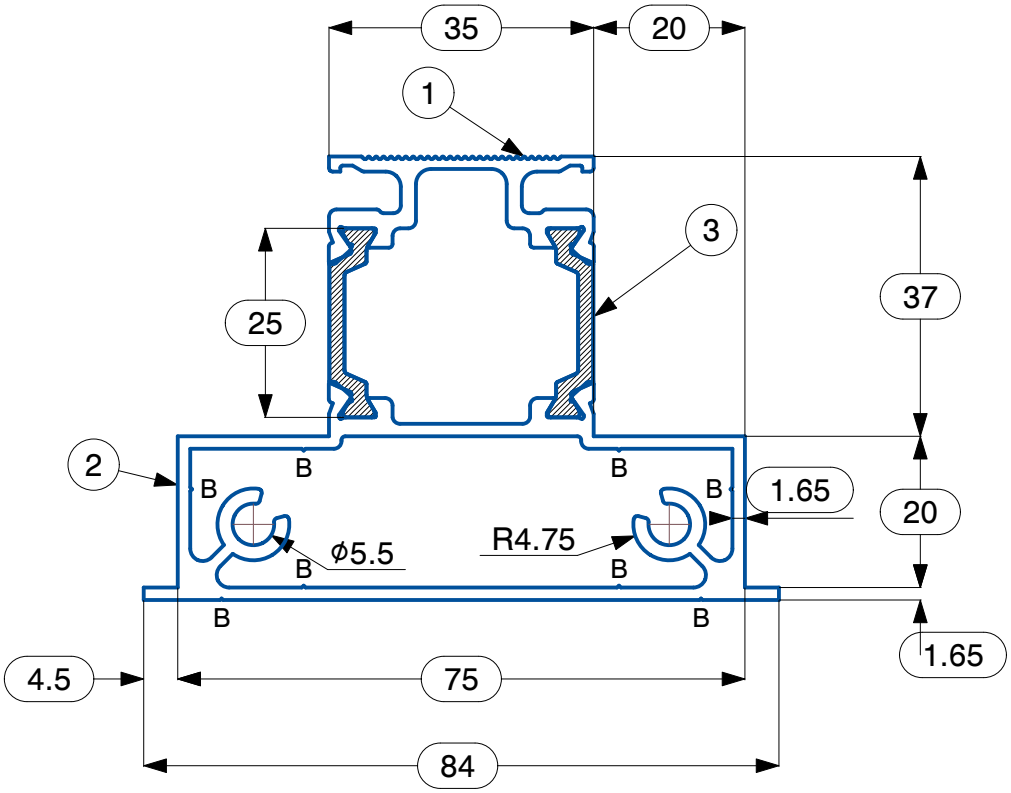

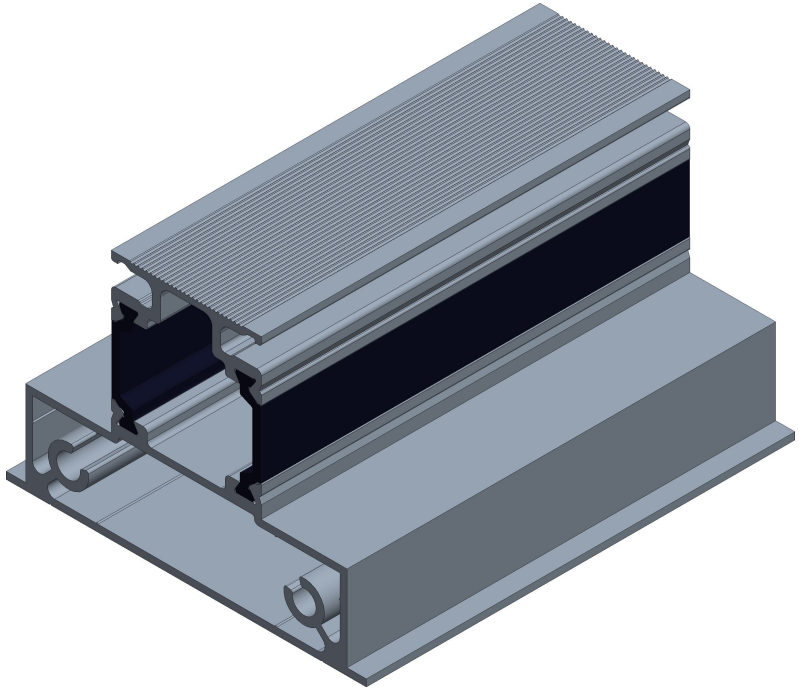

TOLERANCE #		APPROVALS		DATE
0.5 ~ < 10	±0.30	DRAWN	VISWA	03-07-2025
10 ~ < 25	±0.50	CHECKED	KALEEL	22-01-2026
25 ~ < 50	±0.70	APPROVED		
50 ~ < 100	±1.00	MATERIAL: EN AW 6063 - T6		
100 ~ < 150	±1.20	FINISH : MILL (Unless specified)		
THE MAXIMUM ALLOWABLE DEVIATION FOR ANY ANGLE IS ± 2°		Based on customer request on finish, below is applicable FOR ANODIZED : 5-10 MICRONS FOR POWDER COATED : 60-100 MICRONS		
TWIST ALONG THE LENGTH = 3 mm/M		PERIMETER: Ext : 299.61 mm Int : -	AREA: 784.39 mm²	
STRAIGHTNESS = 5 mm/M				

VIVANT SOLUTIONS

VIVANT SOLUTIONS PRIVATE LIMITED,
PLOT NO: 329, SIDCO THIRUMULLAIVOYAL,
CHENNAI, TAMILNADU, INDIA

TITLE : THERMAL BREAK SERATION OMEGA PROFILE ASSEMBLY FOR 57-57-SF-SR SYSTEM

PART CODE : TBALO-57-57-SF-SR

NAME	DESCRIPTION	PART NO.	CODE
3	57-57-SF-SR THERMAL BREAK 25-C	VSPL/AHU/1025	TBPL-25-C
2	57-57-SF-SR THERMAL BREAK SERATION OMEGA INNER	VSPL/AHU/5096	TBALOI-57-57-SF-SR
1	57-57-SF-SR THERMAL BREAK SERATION OMEGA OUTER	VSPL/AHU/5187	TBALOI-57-57-SF-SR

FLATNESS : 0.008 X WIDTH	CUT LENGTH: 6000 (±10) mm	THIRD ANGLE PROJECTION	SIZE : A4
SCALE : 1:1	WEIGHT RANGE : 1.77 - 2.07 Kg/m		RIBS : B = 0.25 X 90°(8 PLACES)
CORNER & FILLET RADII : <5 - ±0.5mm >5 - ± 10%	ALL DIMENSIONS ARE IN mm (MILLIMETERS) UNTILL UNLESS SPECIFIED	# REFERENCE STANDARDS - BSEN-755-9-2008	REV : 0

NOTE		
SL. NO.	NOTE	DESCRIPTION
1	☐	INDICATES INSPECTION DIMENSION

REVISION HISTORY			
REV	DESCRIPTION	DATE	APPROVE

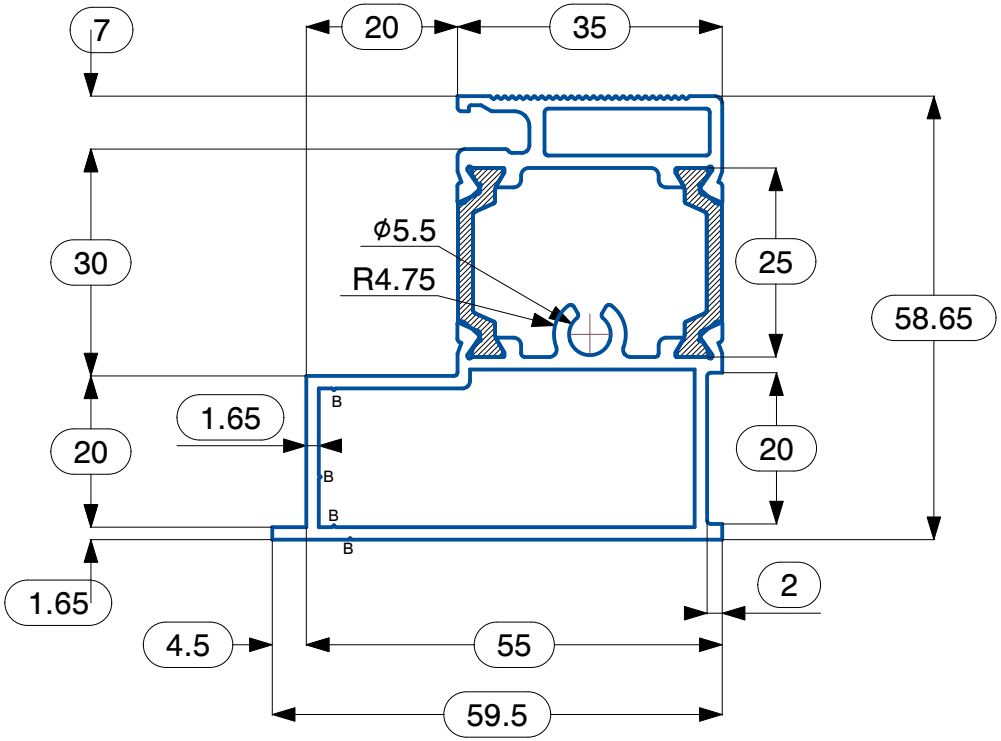

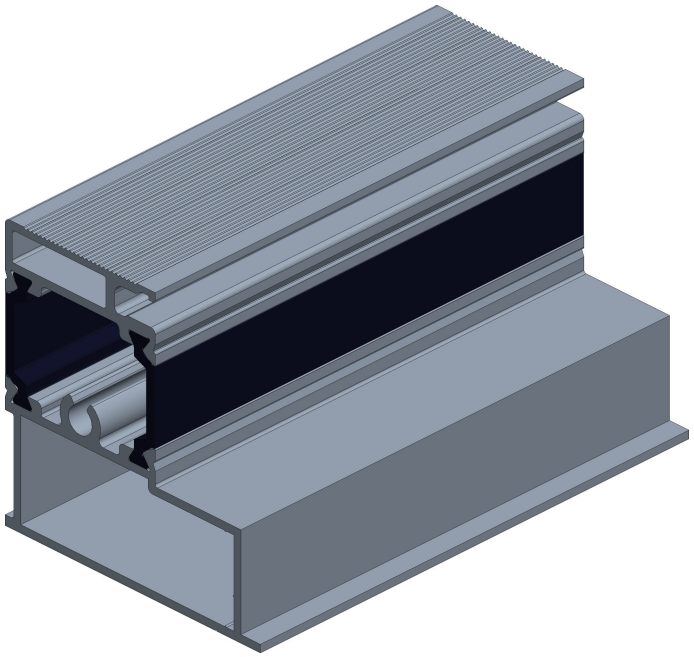

TOLERANCE #	
0.5 ~ < 10	±0.30
10 ~ < 25	±0.50
25 ~ < 50	±0.70
50 ~ < 100	±1.00
100 ~ < 150	±1.20

APPROVALS		DATE
DRAWN	VISWA	03-07-2025
CHECKED	KALEEL	22-01-2026
APPROVED		

MATERIAL: EN AW 6063 - T6

FINISH : MILL (Unless specified)
Based on customer request on finish, below is applicable
FOR ANODIZED : 5-10 MICRONS
FOR POWDER COATED : 60-100 MICRONS

THE MAXIMUM ALLOWABLE DEVIATION FOR ANY ANGLE IS ± 2°

TWIST ALONG THE LENGTH = 3 mm/M

STRAIGHTNESS = 5 mm/M

PERIMETER:
Ext : 145.39 mm
Int : -

AREA: 625.62 mm²

VIVANT SOLUTIONS

VIVANT SOLUTIONS PRIVATE LIMITED,
PLOT NO: 329, SIDCO THIRUMULLAIVOYAL,
CHENNAI, TAMILNADU, INDIA

TITLE : THERMAL BREAK SERRATION SECTION JOINING PROFILE ASSEMBLY FOR 57-57-SF-SR SYSTEM

PART CODE : TBALSJ-57-57-SF-SR

NAME	DESCRIPTION	PART NO.	CODE
3	57-57-SF-SR THERMAL BREAK POLY 25-C	VSPL/AHU/1025	TBPL-25-C
2	57-57-SF-SR THERMAL BREAK SERRATION SECTION JOINING INNER	VSPL/AHU/5098	TBALSJO-57-57-SF-SR
1	57-57-SF-SR THERMAL BREAK SERRATION SECTION JOINING OUTER	VSPL/AHU/5188	TBALSJO-57-57-SF-SR

FLATNESS : 0.008 X WIDTH

SCALE : 1:1

CORNER & FILLET RADII :
<5 - ±0.5mm
>5 - ± 10%

CUT LENGTH: 6000 (±10) mm

WEIGHT RANGE : 1.34 - 1.64 Kg/m

ALL DIMENSIONS ARE IN mm (MILLIMETERS) UNTILL UNLESS SPECIFIED

THIRD ANGLE PROJECTION

SIZE : A4

RIBS :
B = 0.25 X 90°(4 PLACES)

REFERENCE STANDARDS - BSEN-755-9-2008

REV : 0

NOTE		
SL. NO.	NOTE	DESCRIPTION
1	◻	INDICATES INSPECTION DIMENSION

REVISION HISTORY			
REV	DESCRIPTION	DATE	APPROVE

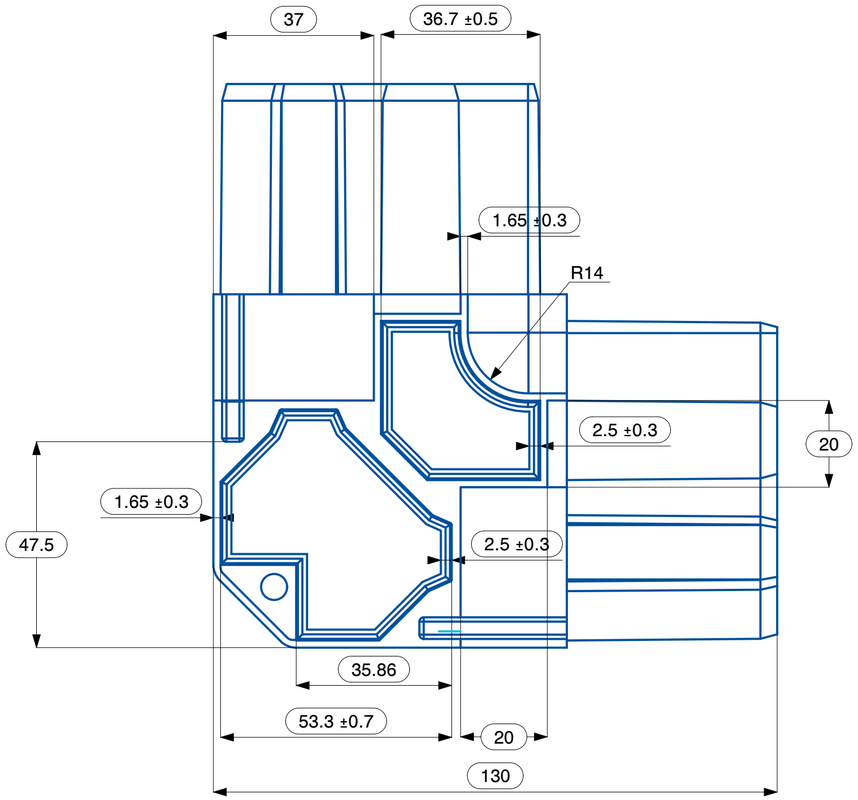

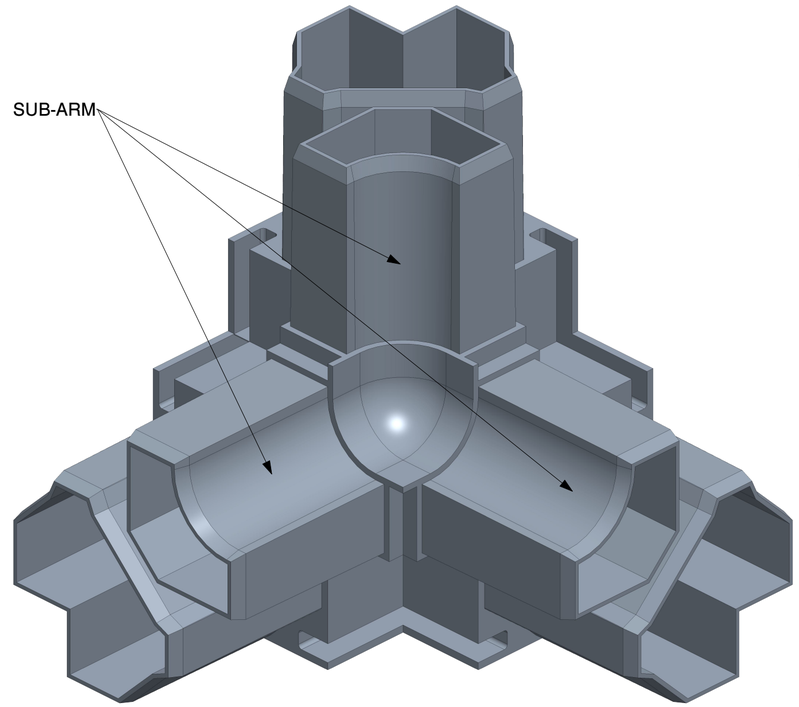

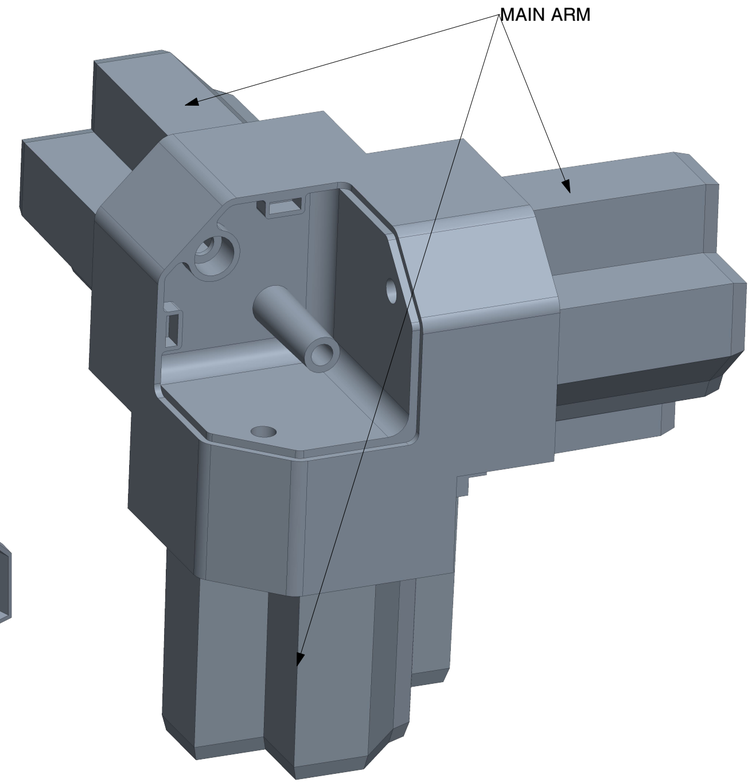

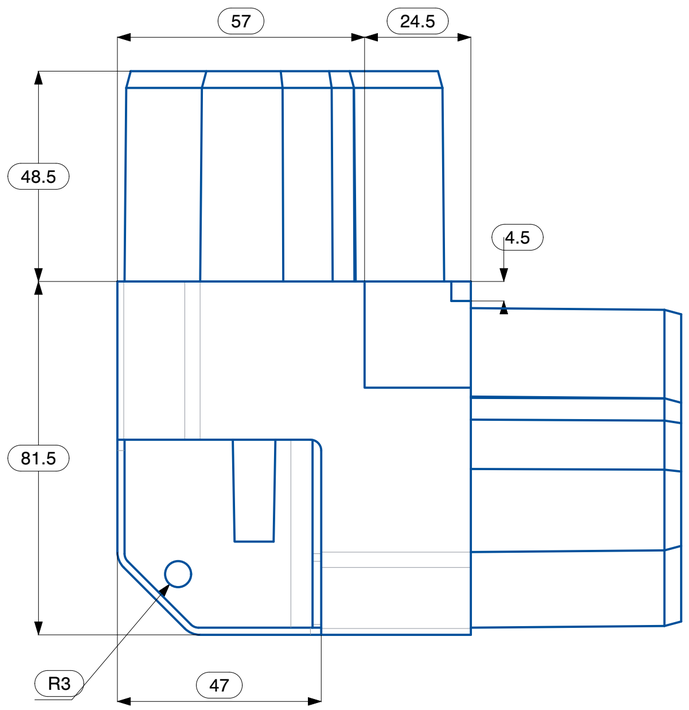

TOLERANCE #		APPROVALS		DATE
0.5 - < 11	± 0.30	DRAWN	SURYA	28-10-2023
11 - < 51	± 0.50	CHECKED	KALIL	20-01-2026
51 - < 80	± 0.70	APPROVED		
80 - < 120	± 1.00	MATERIAL: PA6 GF 30%		
> 120	± 1.20	WEIGHT RANGE : 337 - 357 grams		
-	-	COLOUR : BLACK		
-	-	THIRD ANGLE PROJECTION		
-	-			
-	-			
WARPAGE = ± 5 mm				
THE MAXIMUM ALLOWABLE DEVIATION FOR ANY ANGLE IS ± 2°		ALL DIMENSIONS ARE IN mm (MILLIMETERS)		

VIVANT SOLUTIONS

VIVANT SOLUTIONS PRIVATE LIMITED,
PLOT NO: 329, SIDCO THIRUMULLAIVOYAL,
CHENNAI, TAMILNADU, INDIA

TITLE: 3 - WAY THERMAL BREAK NYLON CORNER FOR 57-57-SF SYSTEM

PART NO: TBNYC-57-57-SF

FINISH : SHOT BLASTING

SIZE : A2	SCALE : 1:1	REV : 0

REFERENCE STANDARDS : ISO 286 - IT 11

NOTE		
SL. NO.	NOTE	DESCRIPTION
1	☐	INDICATES INSPECTION DIMENSION

REVISION HISTORY			
REV	DESCRIPTION	DATE	APPROVE

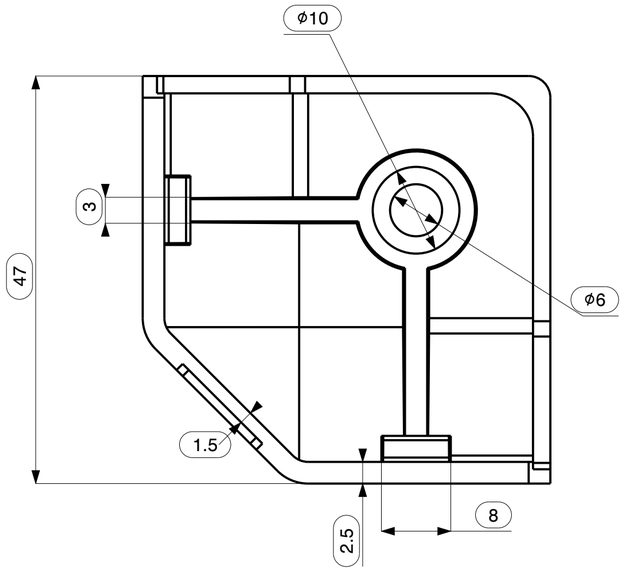

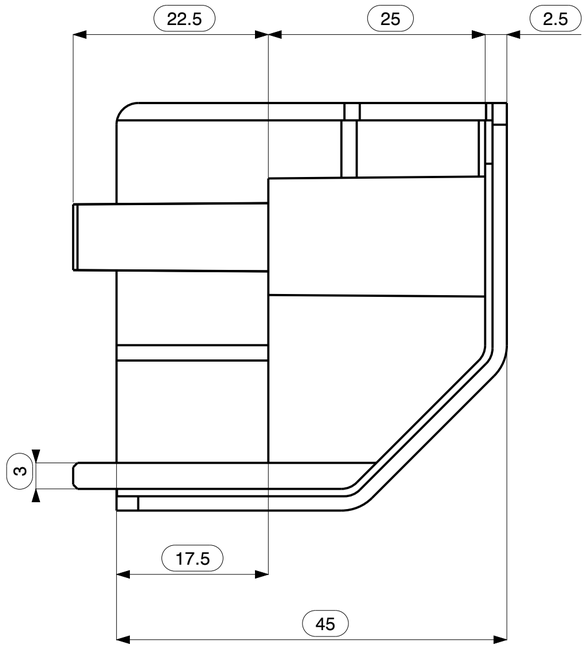

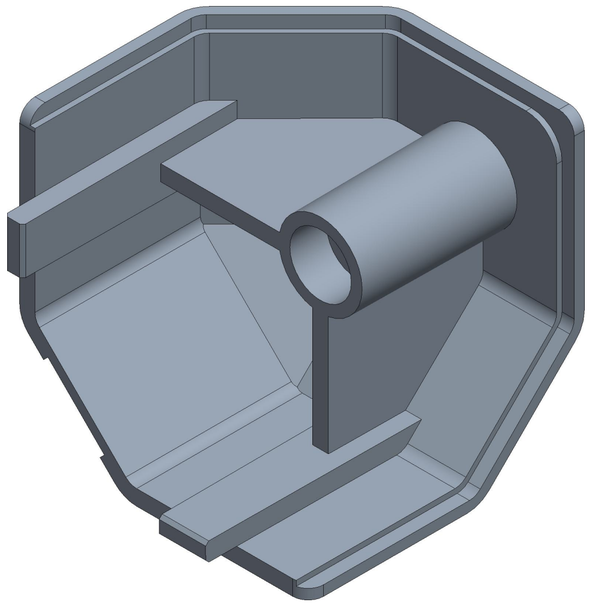

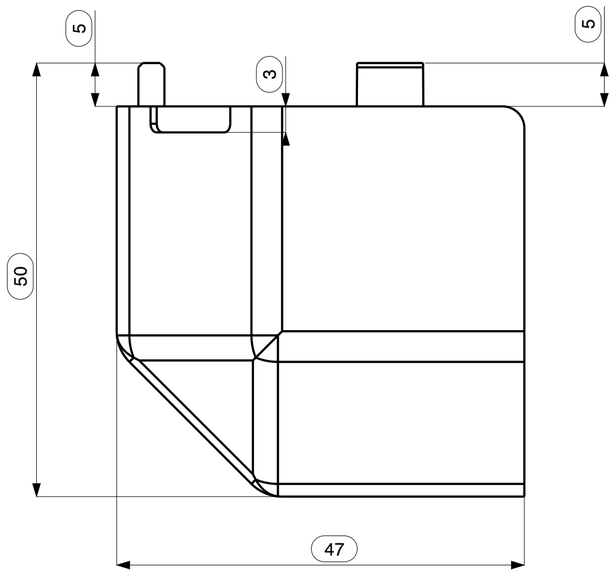

TOLERANCE #		APPROVALS		DATE
0.5 - < 11	± 0.30	DRAWN	VISWA	19-01-2026
11 - < 51	± 0.50	CHECKED	KALEEL	20-01-2026
51 - < 80	± 0.70	APPROVED		
80 - < 120	± 1.00	MATERIAL: PA6 GF 30%		
> 120	± 1.20	WEIGHT RANGE : 12 - 32 grams		
-	-	COLOUR : BLACK		
-	-	THIRD ANGLE PROJECTION		
-	-			
-	-			
WARPAGE = ± 5 mm				
THE MAXIMUM ALLOWABLE DEVIATION FOR ANY ANGLE IS ± 2°		ALL DIMENSIONS ARE IN mm (MILLIMETERS)		

VIVANT SOLUTIONS

VIVANT SOLUTIONS PRIVATE LIMITED,
PLOT NO: 329, SIDCO THIRUMULLAIVOYAL,
CHENNAI, TAMILNADU, INDIA

TITLE: 57-57 SNAP FIXING CORNER END CAP

PART NO: TBNYC-57-57-SF-EC

FINISH : SHOT BLASTING

SIZE : A2	SCALE : 2:1	REV : 0

REFERENCE STANDARDS : ISO 286 - IT 13

NOTE		
SL. NO.	NOTE	DESCRIPTION
1	◻	INDICATES INSPECTION DIMENSION

REVISION HISTORY			
REV	DESCRIPTION	DATE	APPROVE

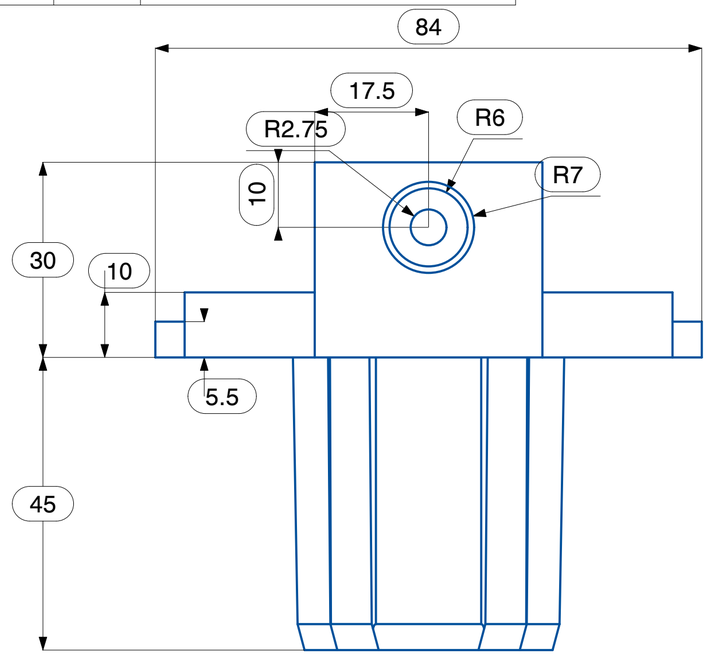

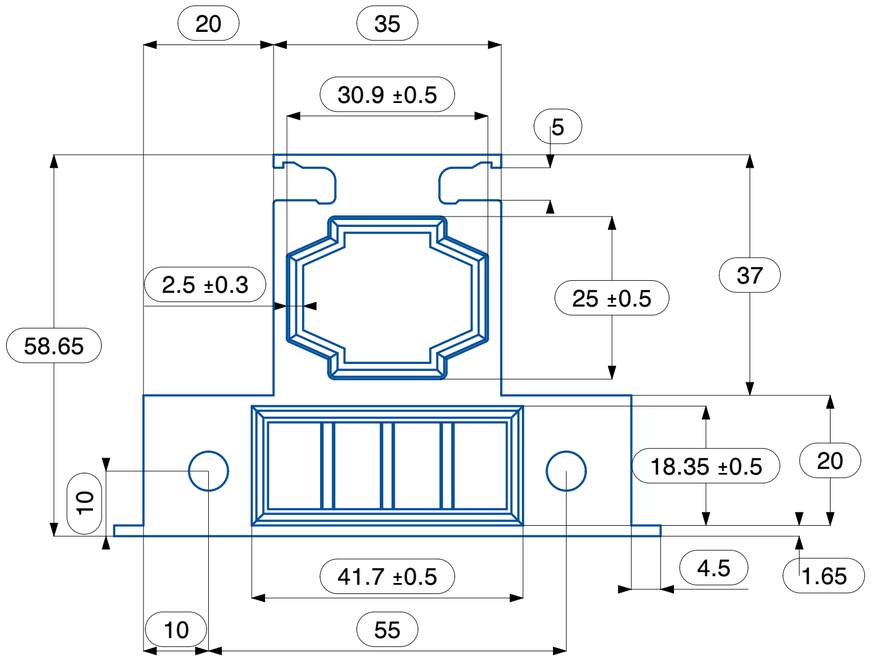

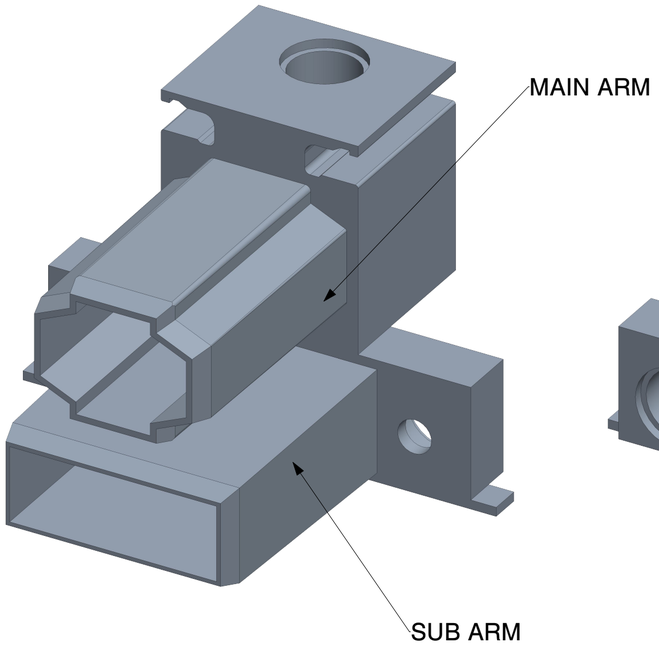

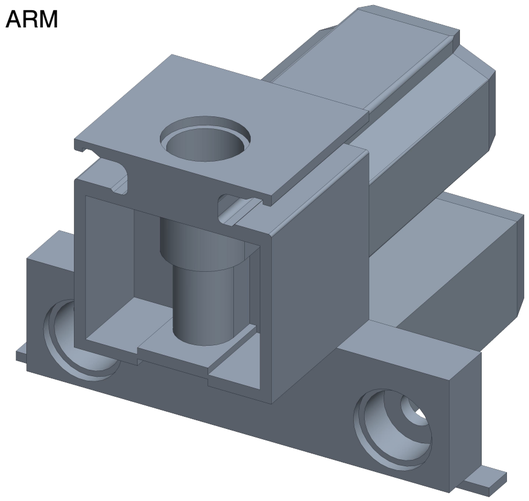

TOLERANCE #		APPROVALS		DATE
0.5 - < 11	± 0.30	DRAWN	SURYA	30-10-2023
11 - < 51	± 0.50	CHECKED	KALIL	20-01-2026
51 - < 80	± 0.70	APPROVED		
80 - < 120	± 1.00	MATERIAL: PA6 GF 30%		
> 120	± 1.20	WEIGHT RANGE : 56 - 76 grams		
-	-	COLOUR : BLACK		
-	-	THIRD ANGLE PROJECTION		
-	-			
-	-			
WARPAGE = ± 5 mm				
THE MAXIMUM ALLOWABLE DEVIATION FOR ANY ANGLE IS ± 2°		ALL DIMENSIONS ARE IN mm (MILLIMETERS)		

VIVANT SOLUTIONS

VIVANT SOLUTIONS PRIVATE LIMITED,
PLOT NO: 329, SIDCO THIRUMULLAIVOYAL,
CHENNAI, TAMILNADU, INDIA

TITLE: THERMAL BREAK NYLON OMEGA FOR 57-57-SF SYSTEM

PART NO: TBNYO-57-57-SF

FINISH : SHOT BLASTING

SIZE : A2	SCALE : 1:1	REV : 0

REFERENCE STANDARDS : ISO 286 - IT 11

MANUFACTURING NOTE		
SL. NO.	NOTE	DESCRIPTION
1	□	INDICATES INSPECTION DIMENSION

REVISION HISTORY			
REV	DESCRIPTION	DATE	APPROVE

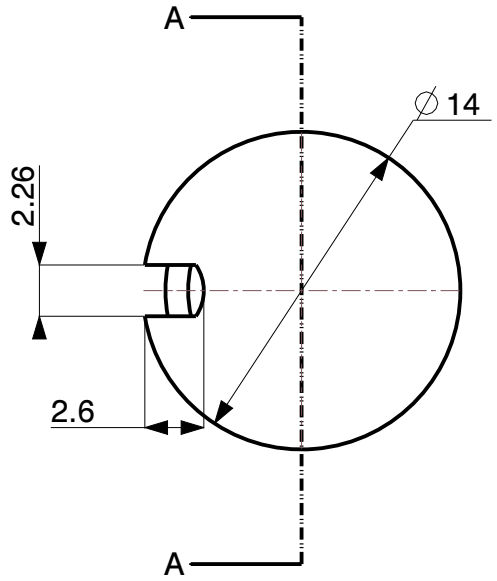

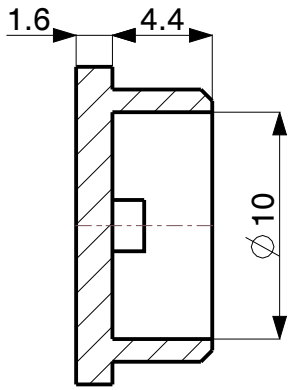

SECTION A-A

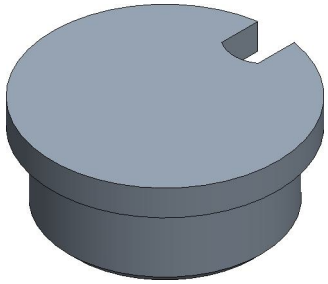

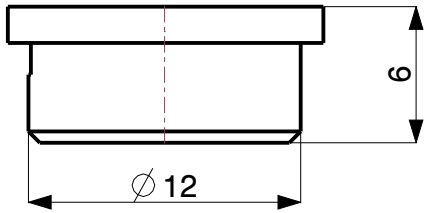

TOLERANCE #		APPROVALS		DATE
0.5 - < 11	± 0.30	DRAWN	DHANASEKAR	02-04-2026
11 - < 51	± 0.50	CHECKED	VISWA	02-04-2026
51 - < 80	± 0.70	APPROVED	KALEEL	
80 - < 120	± 1.00	MATERIAL: PA6 GF 30%		
> 120	± 1.20	WEIGHT : 0.51 grams		
-	-	COLOUR : BLACK		
-	-	THIRD ANGLE PROJECTION		
-	-			
-	-			
-	-			
WARPAGE = ± 5 mm				

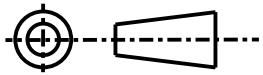

THE MAXIMUM ALLOWABLE DEVIATION FOR ANY ANGLE IS ± 2°

ALL DIMENSIONS ARE IN mm (MILLIMETERS) UNTILL UNLESS SPECIFIED

VIVANT SOLUTIONS PRIVATE LIMITED,
PLOT NO: 329, SIDCO THIRUMULLAIVOYAL,
CHENNAI, TAMILNADU, INDIA

TITLE : THERMAL BREAK OMEGA JOINTER CAP FOR 57-57-SF-SR

PART CODE : TB-NYOJC-57-57-SF-SR

FINISH : SHOT BLASTING

SIZE : A4	SCALE : 3:1	REV : 0

REFERENCE STANDARDS - ISO 286 - IT 13

NOTE		
SL. NO.	NOTE	DESCRIPTION
1	◻	INDICATES INSPECTION DIMENSION

REVISION HISTORY			
REV	DESCRIPTION	DATE	APPROVE

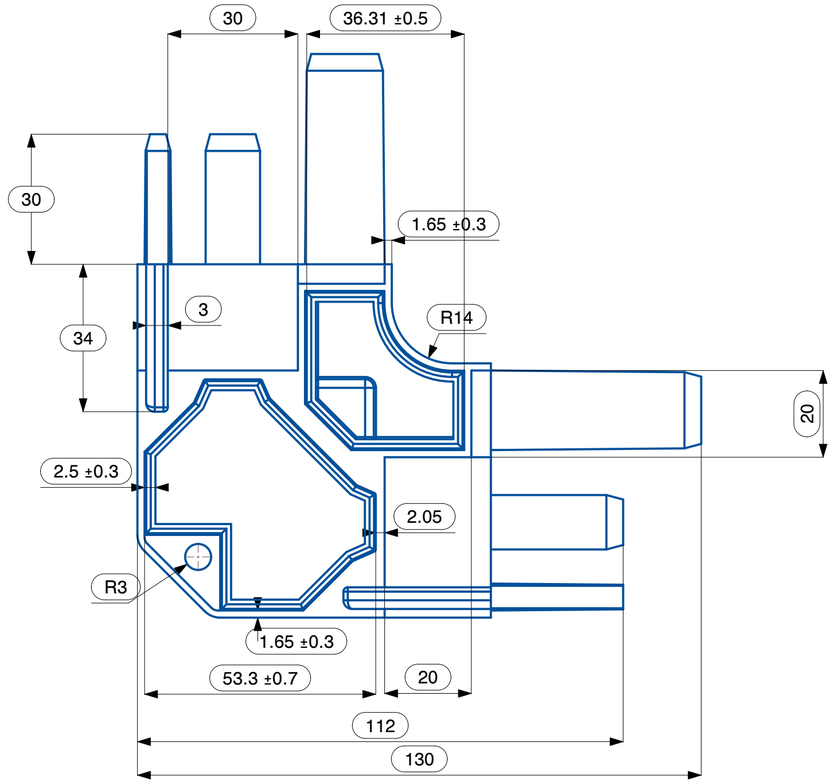

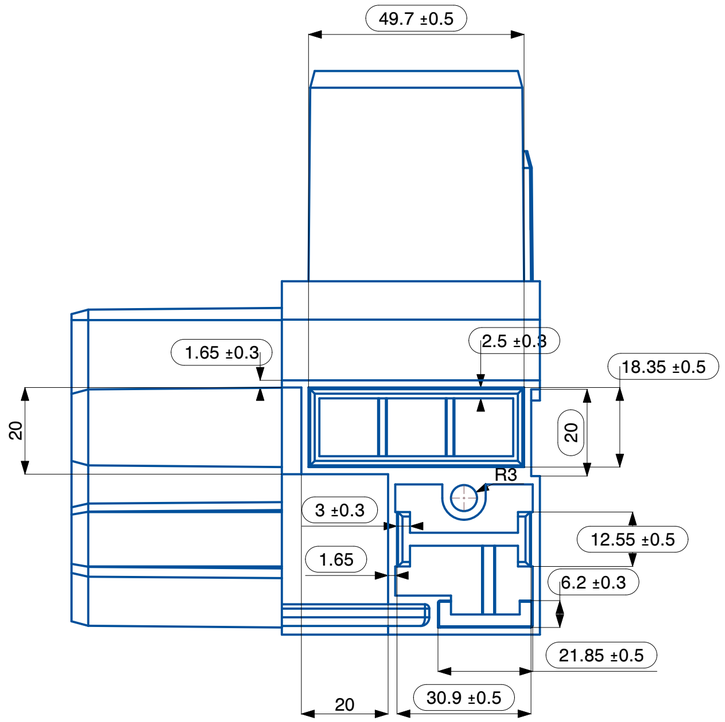

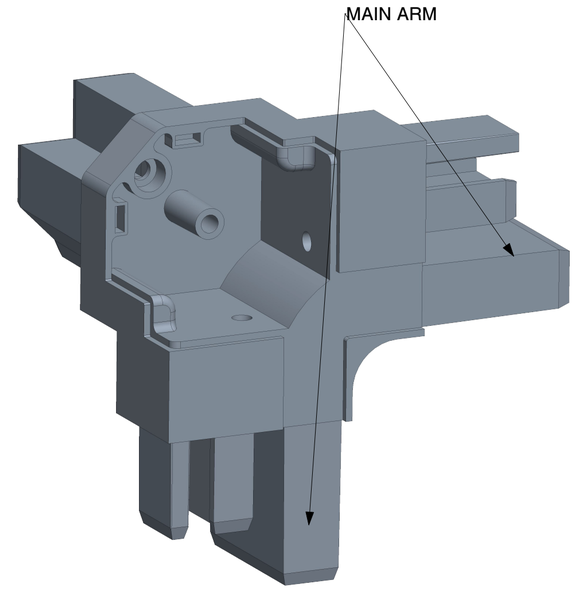

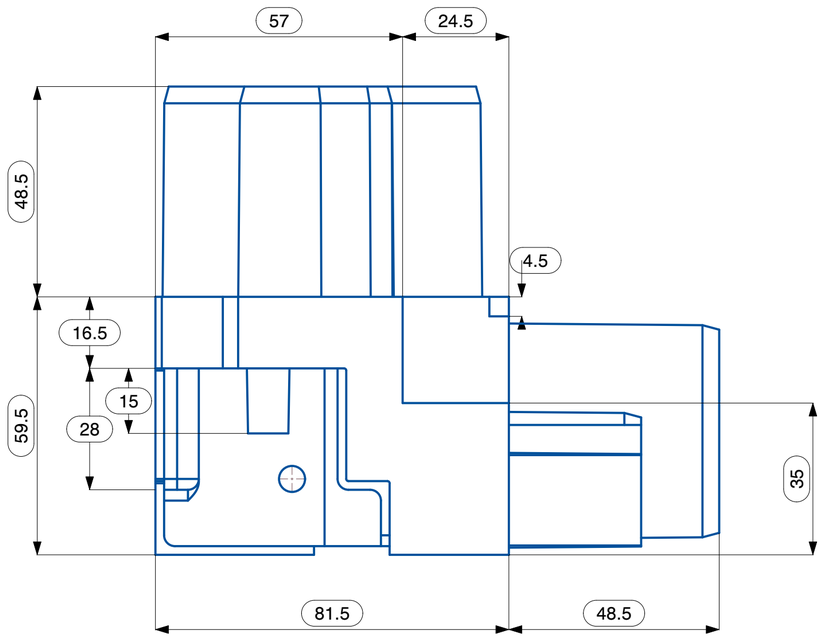

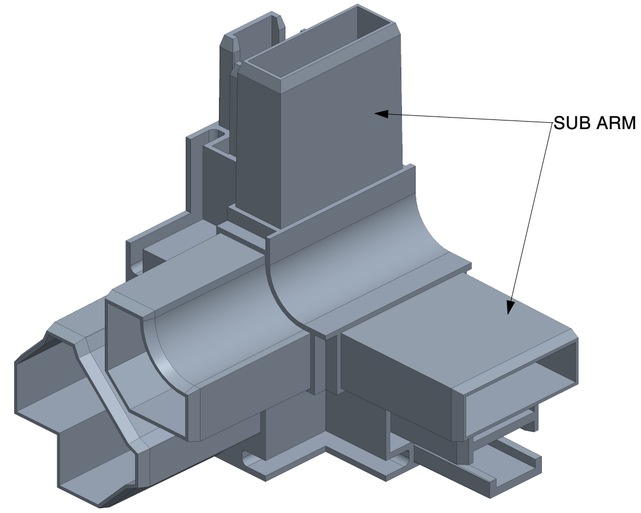

TOLERANCE #		APPROVALS		DATE
0.5 - < 11	± 0.30	DRAWN	SURYA	30-10-2023
11 - < 51	± 0.50	CHECKED	KALIL	20-01-2026
51 - < 80	± 0.70	APPROVED		
80 - < 120	± 1.00	MATERIAL: PA6 GF 30%		
> 120	± 1.20	WEIGHT RANGE : 241 - 261 grams		
-	-	COLOUR : BLACK		
-	-	THIRD ANGLE PROJECTION		
-	-			
-	-			
WARPAGE = ± 5 mm				
THE MAXIMUM ALLOWABLE DEVIATION FOR ANY ANGLE IS ± 2°		ALL DIMENSIONS ARE IN mm (MILLIMETERS)		

VIVANT SOLUTIONS

VIVANT SOLUTIONS PRIVATE LIMITED,
PLOT NO: 329, SIDCO THIRUMULLAIVOYAL,
CHENNAI, TAMILNADU, INDIA

TITLE: 3 - WAY THERMAL BREAK NYLON SECTION JOINING CORNER FOR 57-57-SF SYSTEM

PART NO: TBNYSJ-57-57-SF

FINISH : SHOT BLASTING

SIZE : A2	SCALE : 1:1	REV : 0

REFERENCE STANDARDS : ISO 286 - IT 11

NOTE		
SL. NO.	NOTE	DESCRIPTION
1	☐	INDICATES INSPECTION DIMENSION

REVISION HISTORY			
REV	DESCRIPTION	DATE	APPROVE

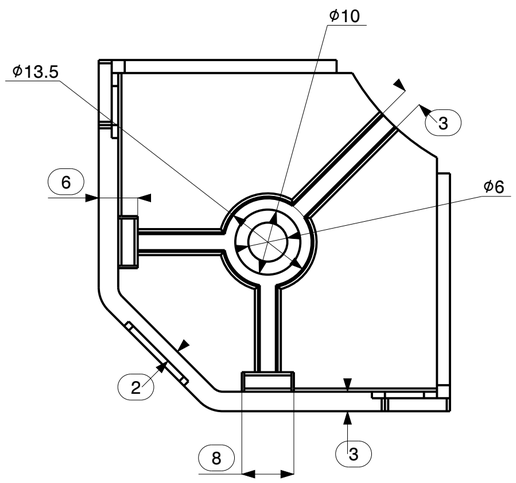

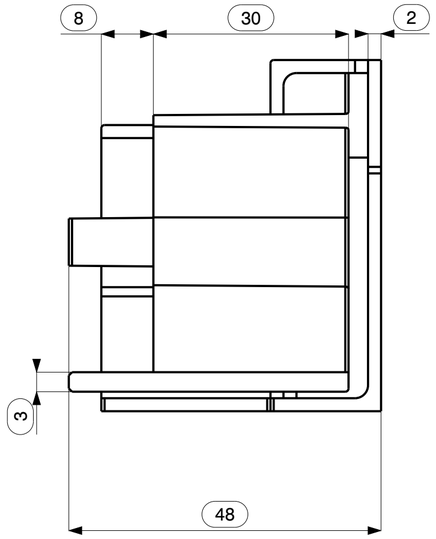

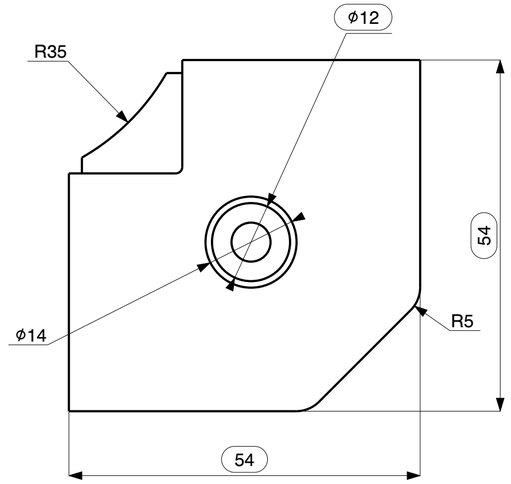

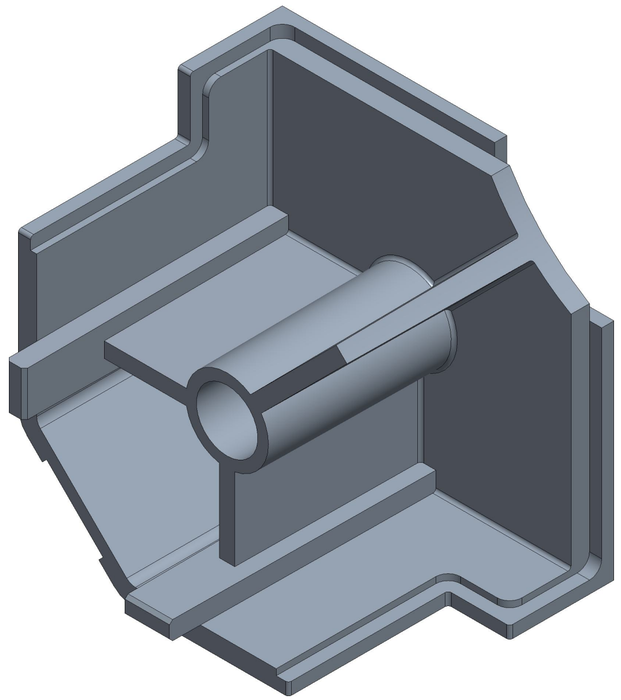

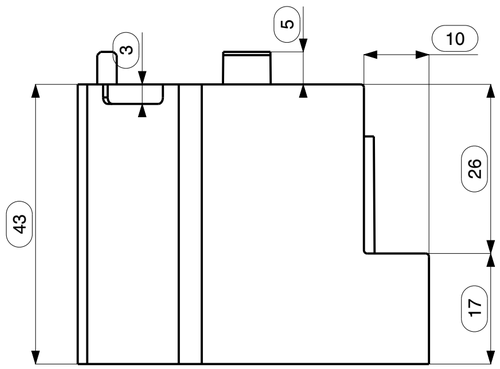

TOLERANCE #		APPROVALS		DATE
0.5 - < 11	± 0.30	DRAWN	VISWA	25-10-2023
11 - < 51	± 0.50	CHECKED	KALIL	25-10-2023
51 - < 80	± 0.70	APPROVED		
80 - < 120	± 1.00	MATERIAL: PA6 GF 30%		
> 120	± 1.20	WEIGHT RANGE : 28 - 48 grams		
-	-	COLOUR : BLACK		
-	-	THIRD ANGLE PROJECTION		
-	-			
-	-			
WARPAGE = ± 5 mm				
THE MAXIMUM ALLOWABLE DEVIATION FOR ANY ANGLE IS ± 2°		ALL DIMENSIONS ARE IN mm (MILLIMETERS)		

VIVANT SOLUTIONS

VIVANT SOLUTIONS PRIVATE LIMITED,
PLOT NO: 329, SIDCO THIRUMULLAIVOYAL,
CHENNAI, TAMILNADU, INDIA

TITLE:57-57 SNAP FIXING SECTION JOINING END CAP

PART NO: TBNYSJ-57-57-SF-EC

FINISH : SHOT BLASTING

SIZE : A2	SCALE : 2:1	REV : 0

REFERENCE STANDARDS : ISO 286 - IT 13

NOTE		
SL. NO.	NOTE	DESCRIPTION
1	☐	INDICATES INSPECTION DIMENSION

REVISION HISTORY			
REV	DESCRIPTION	DATE	APPROVE

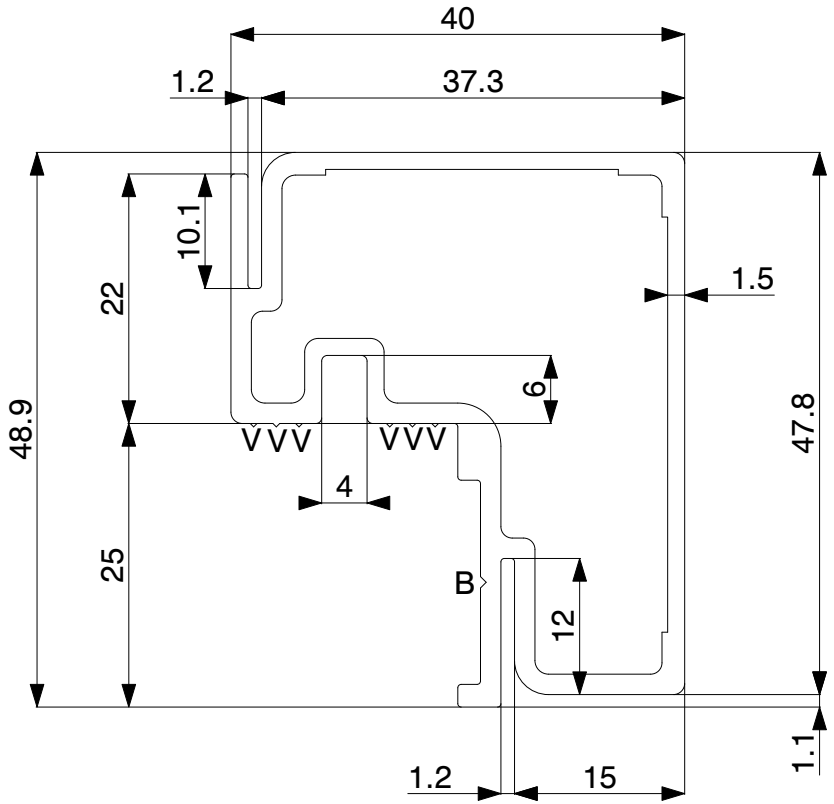

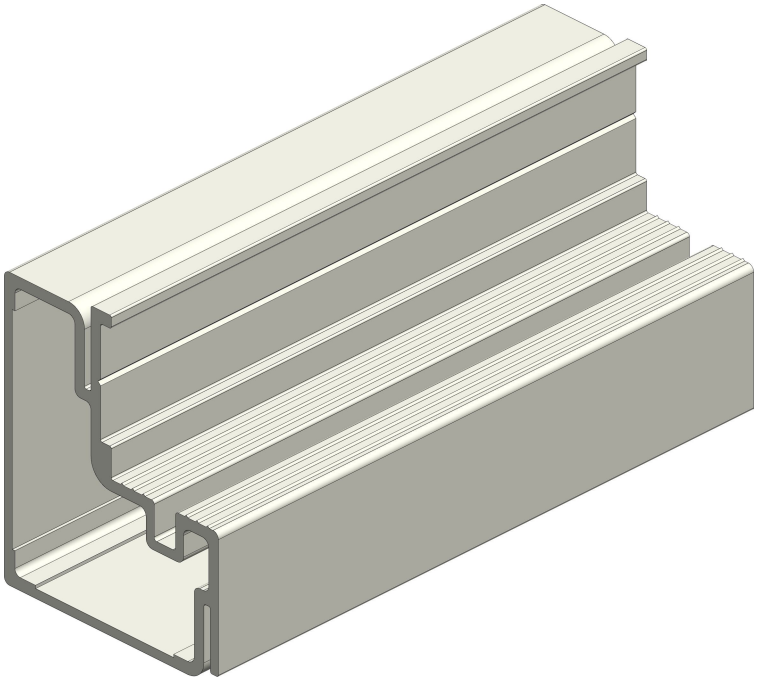

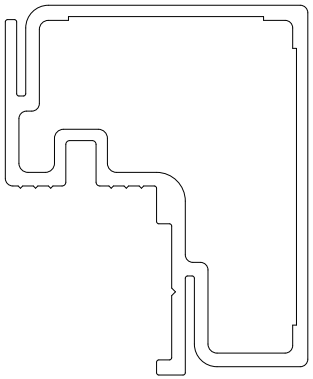

TOLERANCE #		APPROVALS		DATE
0.5 ~ < 10	±0.30	DRAWN	DHANASEKAR	03-04-2026
10 ~ < 25	±0.50	CHECKED	VISWA	03-04-2026
25 ~ < 50	±0.70	APPROVED	KALEEL	
50 ~ < 100	±1.00	MATERIAL: PVC-U		
100 ~ < 150	±1.20	COLOUR : BLACK		
THE MAXIMUM ALLOWABLE DEVIATION FOR ANY ANGLE IS ± 2°		FINISH : GLOSSY		
TWIST ALONG THE LENGTH = 3 mm/M		AREA: 350.68 mm²		
STRAIGHTNESS = 5 mm/M		WEIGHT RANGE : 0.472 - 0.502 Kg/m		
FLATNESS : 0.008 X WIDTH		CUT LENGTH: 3000 (±10) mm		
WARPAGE = ±5 mm		WORKING TEMPERATURE: 50 ±5 (°C)		
CORNER & FILLET RADII : <5 - ±0.5mm >5 - ± 10%		ALL DIMENSIONS ARE IN mm (MILLIMETERS) UNTILL UNLESS SPECIFIED		

VIVANT® SOLUTIONS

VIVANT SOLUTIONS PRIVATE LIMITED,
PLOT NO: 329, SIDCO THIRUMULLAIVOYAL,
CHENNAI, TAMILNADU, INDIA

TITLE : THERMAL BREAK PANEL BREAKER FOR 57-57-SF / 57-57-SR-SF SYSTEM

PART CODE : TB-PVC-PB-57-57-SF/SR-SF	SCALE: 1.5:1, 1:1
THIRD ANGLE PROJECTION	SIZE : A4
	RIBS: V = 0.3 X 90° (6 PLACES) B = 0.5 X 90° (1 PLACES)
# REFERENCE STANDARDS - BSEN-755-9-2008	REV : 0