NOTE		
SL. NO.	NOTE	DESCRIPTION
1	☐	INDICATES INSPECTION DIMENSION

REVISION HISTORY			
REV	DESCRIPTION	DATE	APPROVE

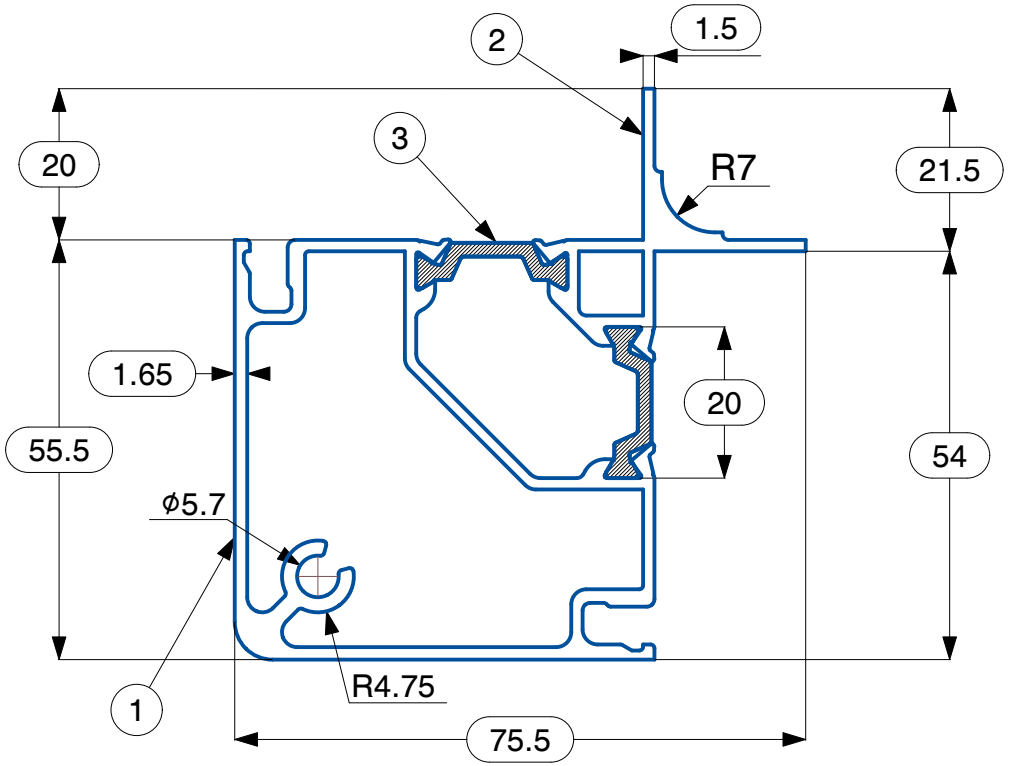

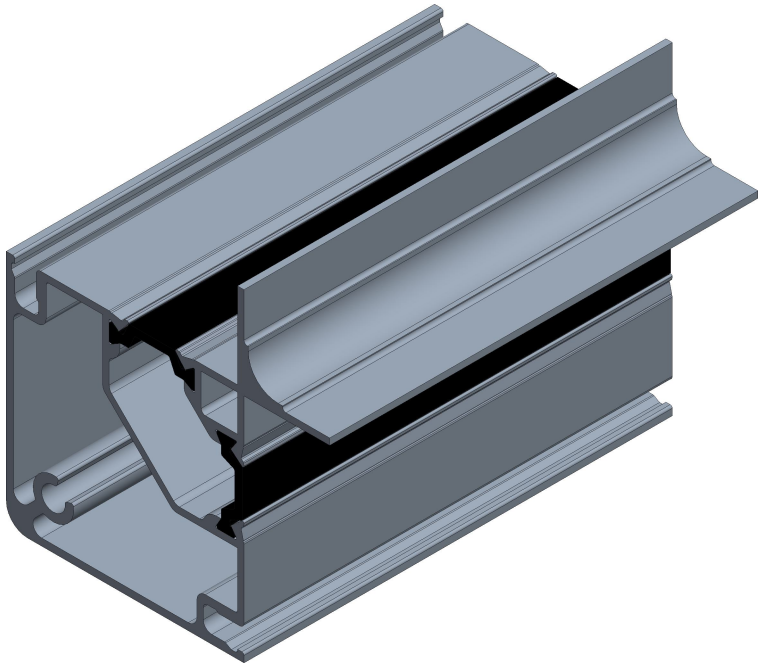

TOLERANCE #	
0.5 ~ < 10	±0.30
10 ~ < 25	±0.50
25 ~ < 50	±0.70
50 ~ < 100	±1.00
100 ~ < 150	±1.20

APPROVALS		DATE
DRAWN	VISWA	22-01-2026
CHECKED	KALEEL	22-01-2026
APPROVED		

MATERIAL: EN AW 6063 - T6

FINISH : MILL (Unless specified)
Based on customer request on finish, below is applicable
FOR ANODIZED : 5-10 MICRONS
FOR POWDER COATED : 60-100 MICRONS

THE MAXIMUM ALLOWABLE DEVIATION FOR ANY ANGLE IS ± 2°

TWIST ALONG THE LENGTH = 3 mm/M

STRAIGHTNESS = 5 mm/M

PERIMETER:
Ext : 312.56 mm
Int : -

AREA: 748.13 mm²

VIVANT SOLUTIONS

VIVANT SOLUTIONS PRIVATE LIMITED,
PLOT NO: 329, SIDCO THIRUMULLAIVOYAL,
CHENNAI, TAMILNADU, INDIA

TITLE : THERMAL BREAK SNAP FIXING CORNER PROFILE ASSEMBLY FOR 55-54-SFSYSTEM

PART CODE : TBALC-55-54-SF

NAME	DESCRIPTION	PART NO.	CODE
3	55-54-SF THERMAL BREAK 20-C	VSPL/AHU/1020	TBPL-20-C
2	55-54-SF THERMAL BREAK SNAP FIXING CORNER INNER	VSPL/AHU/5049	TBALCI-55-54-SF
1	55-54-SF THERMAL BREAK SNAP FIXING CORNER OUTER	VSPL/AHU/5048	TBALCO-55-54-SF

FLATNESS : 0.008 X WIDTH

SCALE : 1:1

CORNER & FILLET RADII :
<5 - ±0.5mm
>5 - ± 10%

CUT LENGTH: 6000 (±10) mm

WEIGHT RANGE : 1.70 - 2.00 Kg/m

ALL DIMENSIONS ARE IN mm (MILLIMETERS) UNTILL UNLESS SPECIFIED

THIRD ANGLE PROJECTION

SIZE : A4

RIBS :
B = -

REFERENCE STANDARDS - BSEN-755-9-2008

REV : 0

NOTE		
SL. NO.	NOTE	DESCRIPTION
1	☐	INDICATES INSPECTION DIMENSION

REVISION HISTORY			
REV	DESCRIPTION	DATE	APPROVE

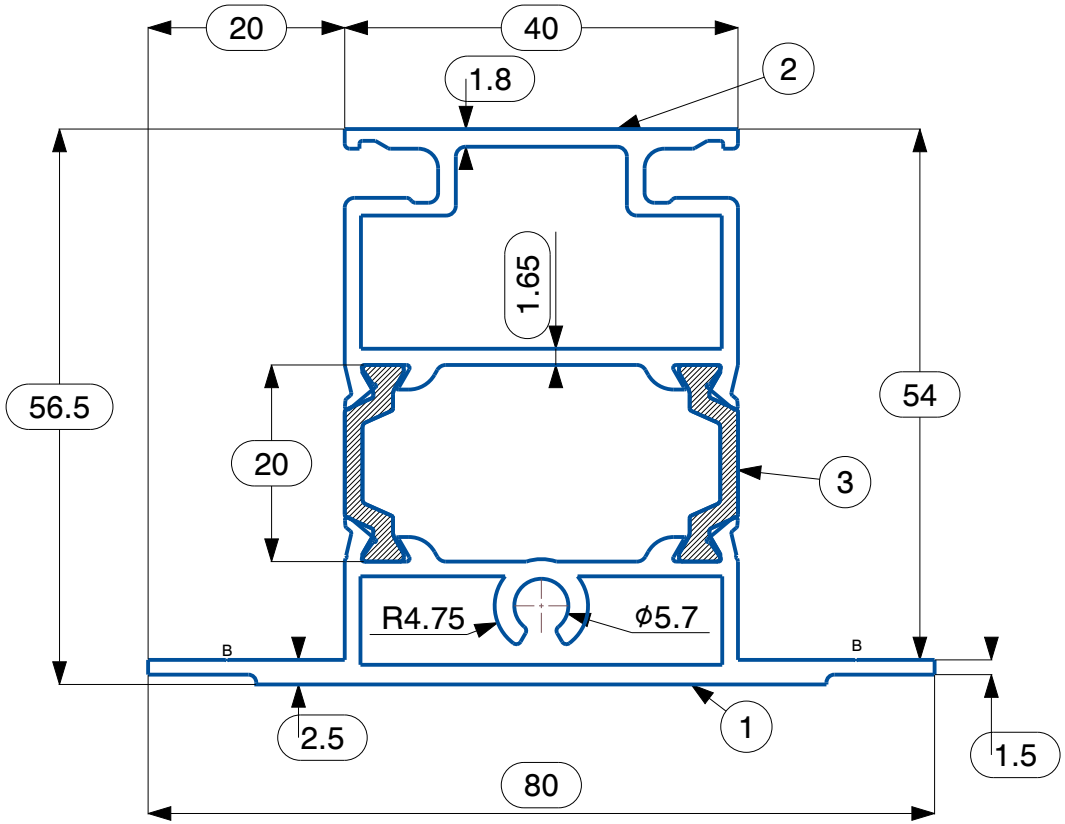

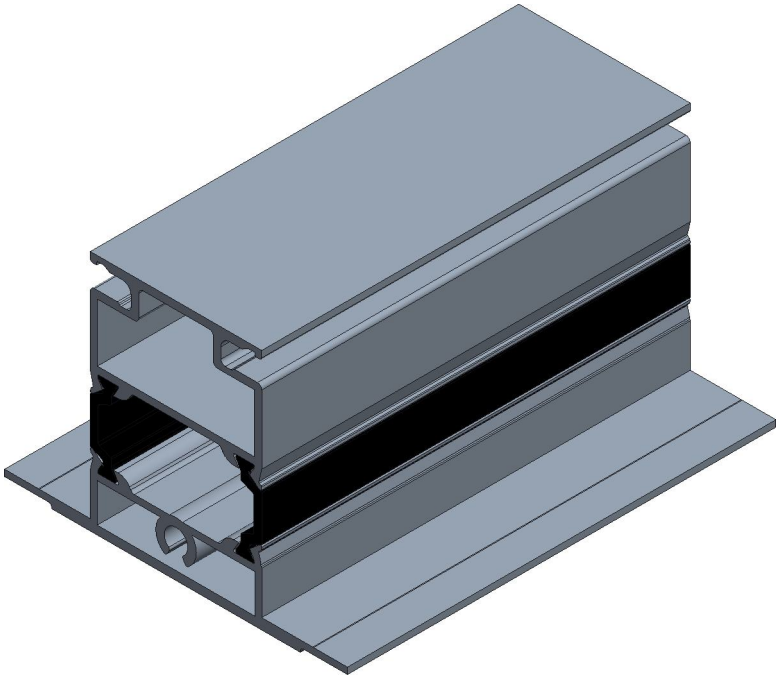

TOLERANCE #	
0.5 ~ < 10	±0.30
10 ~ < 25	±0.50
25 ~ < 50	±0.70
50 ~ < 100	±1.00
100 ~ < 150	±1.20

APPROVALS		DATE
DRAWN	VISWA	19-10-2023
CHECKED	KALEEL	22-01-2026
APPROVED		

MATERIAL: EN AW 6063 - T6

FINISH : MILL (Unless specified)
Based on customer request on finish, below is applicable
FOR ANODIZED : 5-10 MICRONS
FOR POWDER COATED : 60-100 MICRONS

THE MAXIMUM ALLOWABLE DEVIATION FOR ANY ANGLE IS ± 2°

TWIST ALONG THE LENGTH = 3 mm/M

STRAIGHTNESS = 5 mm/M

PERIMETER:
Ext : 287.93 mm
Int : -

AREA: 685.169 mm²

VIVANT SOLUTIONS PRIVATE LIMITED,
PLOT NO: 329, SIDCO THIRUMULLAIVOYAL,
CHENNAI, TAMILNADU, INDIA

TITLE : THERMAL BREAK SNAP FIXING OMEGA PROFILE ASSEMBLY FOR 55-54-SF SYSTEM

PART CODE : TBALO-55-54-SF

NAME	DESCRIPTION	PART NO.	CODE
3	55-54-SF THERMAL BREAK 20-C	VSPL/AHU/1020	TBPL-20-C
2	55-54-SF THERMAL BREAK SNAP FIXING OMEGA INNER	VSPL/AHU/5051	TBALOI-55-54-SF
1	55-54-SF THERMAL BREAK SNAP FIXING OMEGA OUTER	VSPL/AHU/5050	TBALOO-55-54-SF

FLATNESS : 0.008 X WIDTH

SCALE : 1:1

CORNER & FILLET RADII :
< 5 - ±0.5mm
> 5 - ± 10%

CUT LENGTH: 6000 (±10) mm

WEIGHT RANGE : 1.53 - 1.83 Kg/m

ALL DIMENSIONS ARE IN mm (MILLIMETERS) UNTILL UNLESS SPECIFIED

THIRD ANGLE PROJECTION

SIZE : A4

RIBS :
B = 0.1 X 90°(2 PLACES)

REFERENCE STANDARDS - BSEN-755-9-2008

REV : 0

NOTE		
SL.NO.	NOTE	DESCRIPTION
1	□	INDICATES INSPECTION DIMENSION

REVISION HISTORY			
REV	DESCRIPTION	DATE	APPROVE

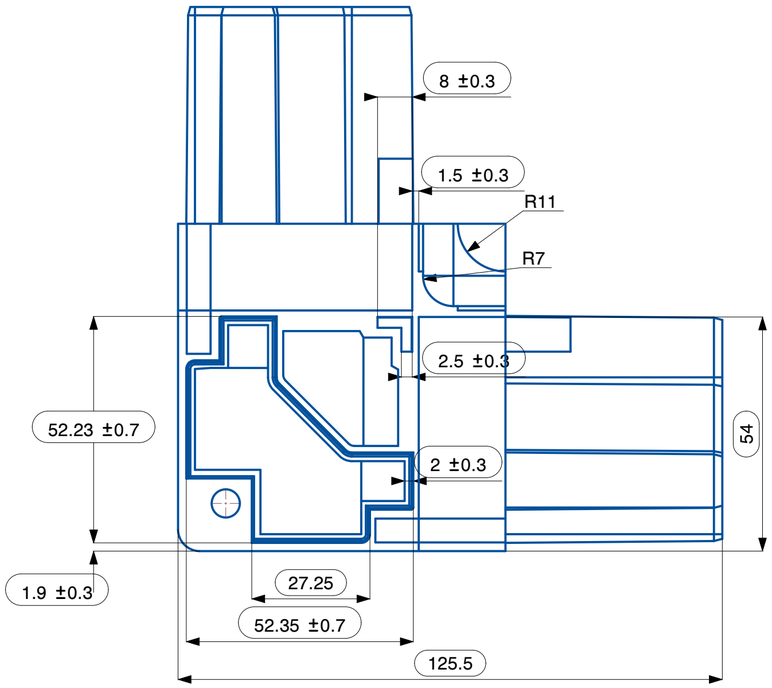

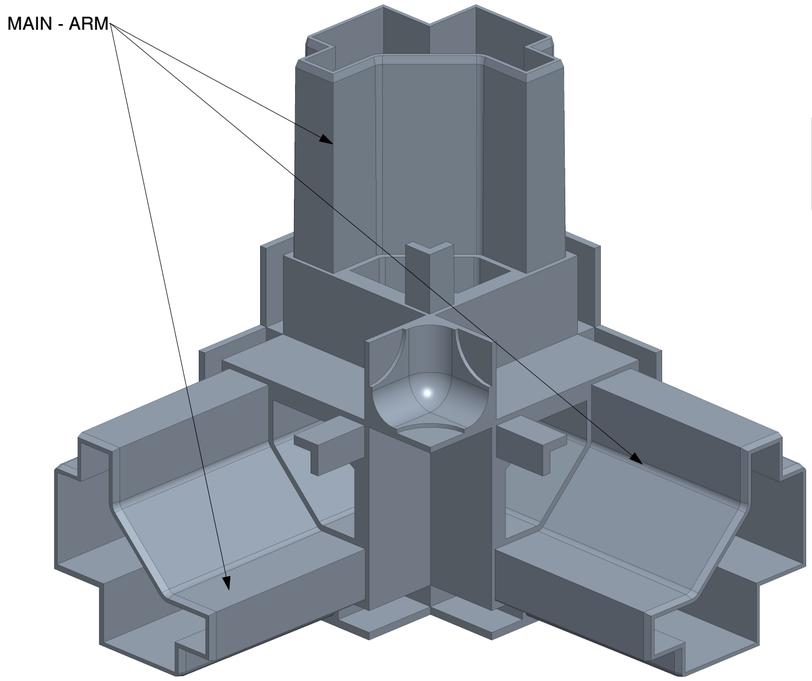

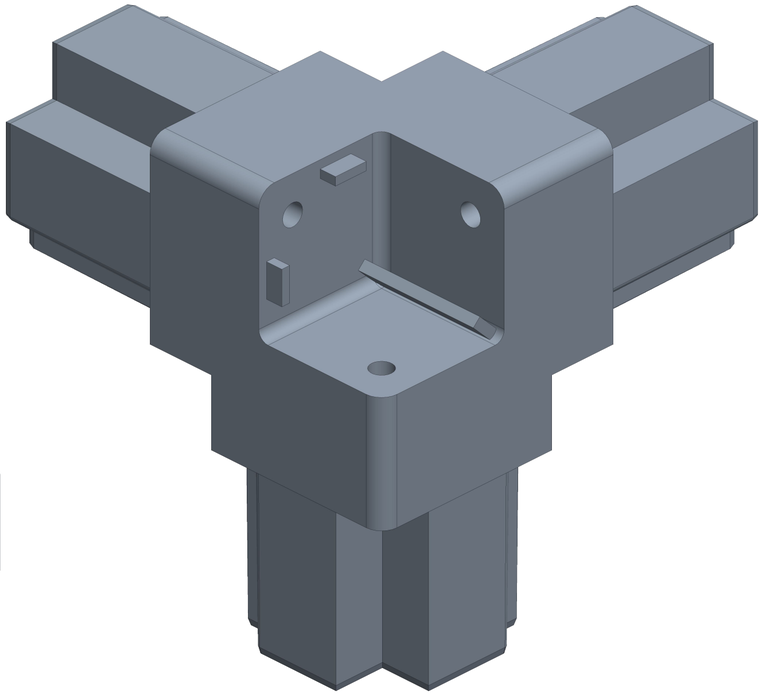

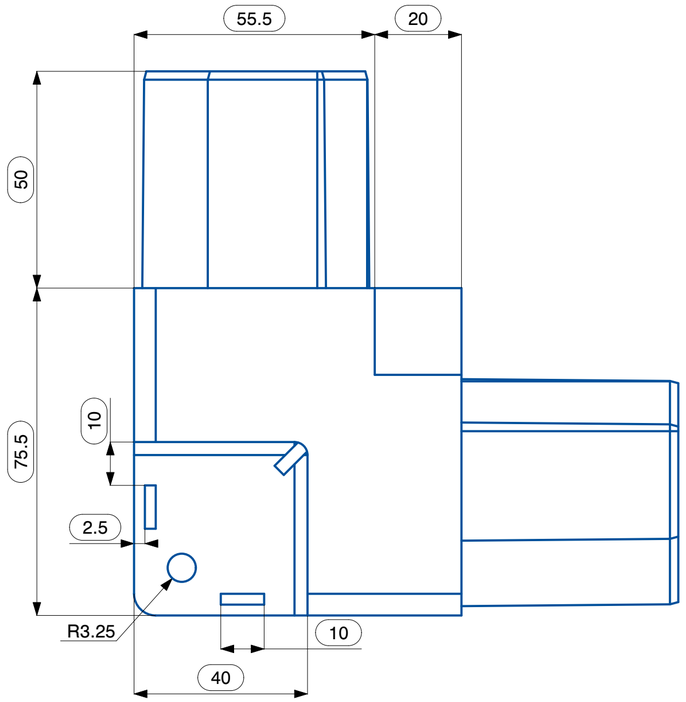

TOLERANCE #		APPROVALS		DATE
0.5 - < 11	± 0.30	DRAWN	VISWA	25-10-2023
11 - < 51	± 0.50	CHECKED	KALIL	20-01-2026
51 - < 80	± 0.70	APPROVED		
80 - < 120	± 1.00	MATERIAL: PA6 GF 30%		
> 120	± 1.20	WEIGHT RANGE : 260 - 280 grams		
-	-	COLOUR : RAL 7044 (SILK GREY)		
-	-	THIRD ANGLE PROJECTION		
-	-			
-	-			
WARPAGE = ± 5 mm				
THE MAXIMUM ALLOWABLE DEVIATION FOR ANY ANGLE IS ± 2°		ALL DIMENSIONS ARE IN mm (MILLIMETERS)		

VIVANT SOLUTIONS

VIVANT SOLUTIONS PRIVATE LIMITED,
PLOT NO: 329, SIDCO THIRUMULLAIVOYAL,
CHENNAI, TAMILNADU, INDIA

TITLE: 3 - WAY THERMAL BREAK NYLON CORNER FOR 55-54 SYSTEM

PART NO: TBNYC-55-54

FINISH : SHOT BLASTING

SIZE : A2	SCALE : 1:1	REV : 0

REFERENCE STANDARDS : ISO 286 - IT 13

NOTE		
SL. NO.	NOTE	DESCRIPTION
1	☐	INDICATES INSPECTION DIMENSION

REVISION HISTORY			
REV	DESCRIPTION	DATE	APPROVE

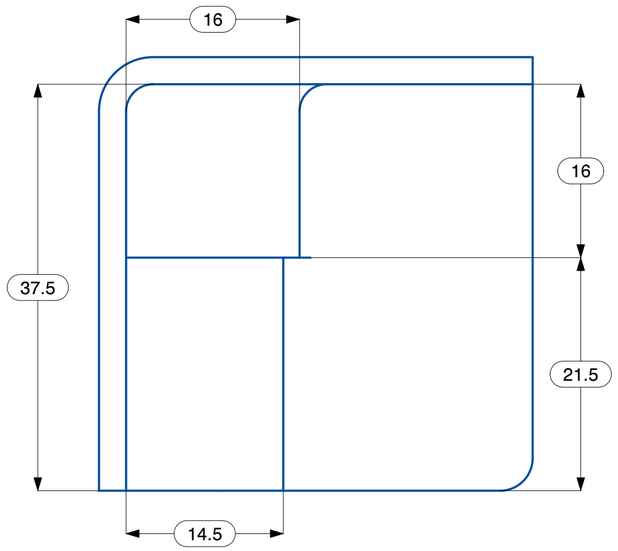

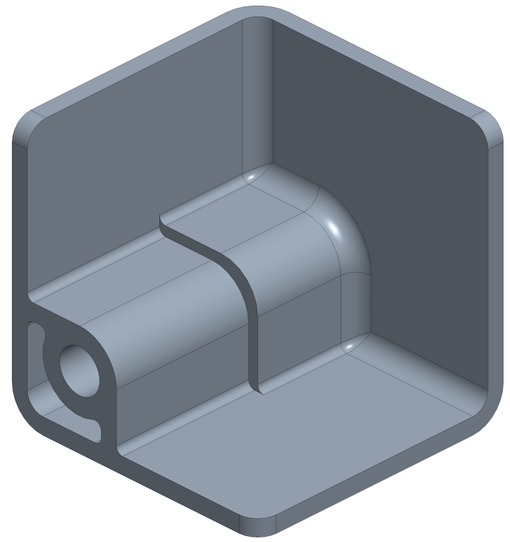

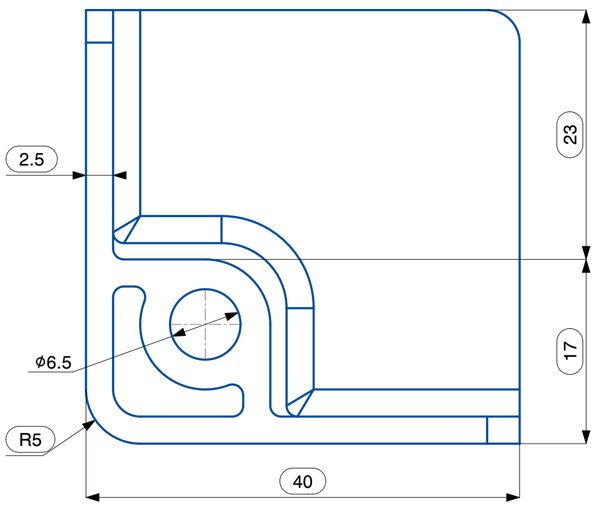

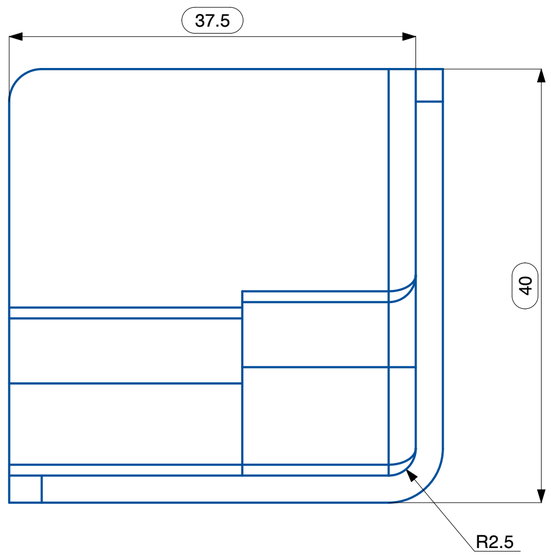

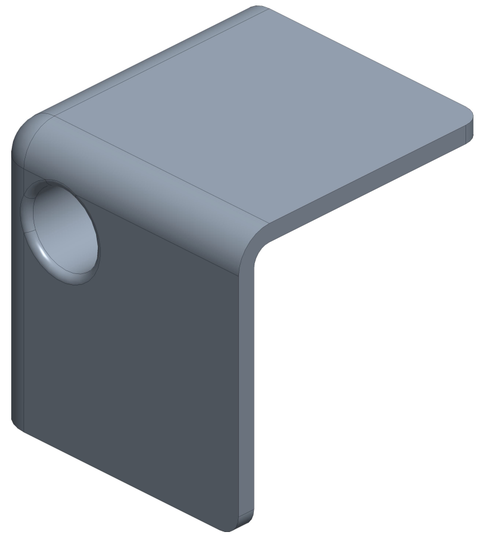

TOLERANCE #		APPROVALS		DATE
0.5 - < 11	± 0.30	DRAWN	VISWA	25-10-2023
11 - < 51	± 0.50	CHECKED	KALIL	20-01-2026
51 - < 80	± 0.70	APPROVED		
80 - < 120	± 1.00	MATERIAL: PA6 GF 30%		
> 120	± 1.20	WEIGHT RANGE : 20 - 40 grams		
-	-	COLOUR : RALK 7044 (SILK GREY)		
-	-	THIRD ANGLE PROJECTION		
-	-			
-	-			
WARPAGE = ± 5 mm				
THE MAXIMUM ALLOWABLE DEVIATION FOR ANY ANGLE IS ± 2°		ALL DIMENSIONS ARE IN mm (MILLIMETERS)		

VIVANT SOLUTIONS

VIVANT SOLUTIONS PRIVATE LIMITED,
PLOT NO: 329, SIDCO THIRUMULLAIVOYAL,
CHENNAI, TAMILNADU, INDIA

TITLE: NYLON CORNER 55-54-CAP

PART NO: NYC-55-54-C

FINISH : SHOT BLASTING

SIZE : A2	SCALE : 1:1	REV : 0

REFERENCE STANDARDS : ISO 286 - IT 13

NOTE		
SL. NO.	NOTE	DESCRIPTION
1	☐	INDICATES INSPECTION DIMENSION

REVISION HISTORY			
REV	DESCRIPTION	DATE	APPROVE

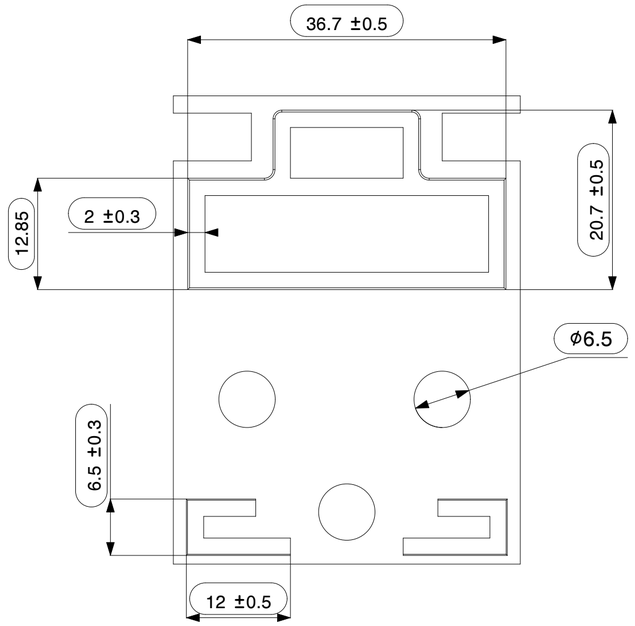

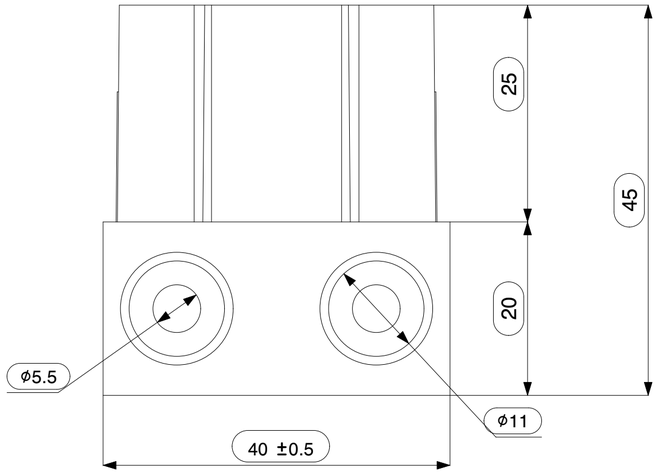

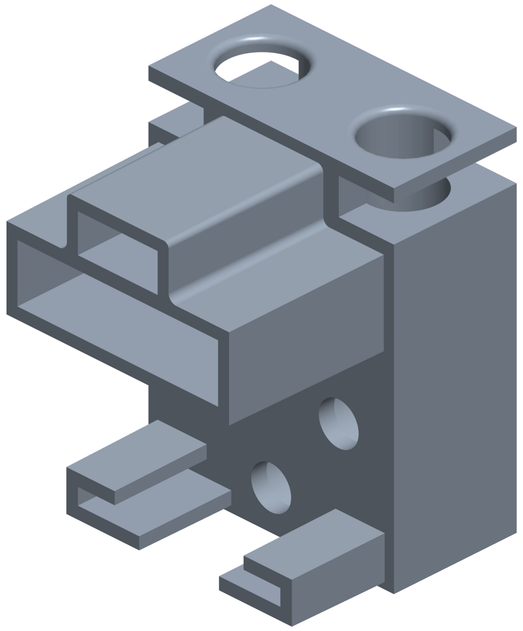

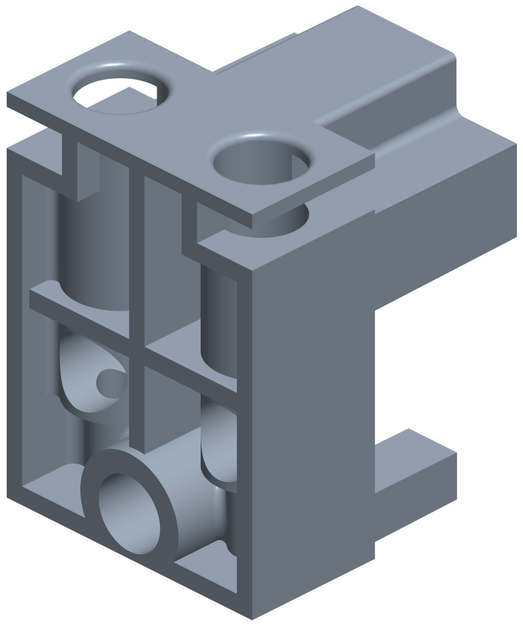

ISO VIEW

TOLERANCE #		APPROVALS		DATE
0.5 - < 11	± 0.30	DRAWN	VISWA	25-10-2023
11 - < 51	± 0.50	CHECKED	KALIL	20-01-2026
51 - < 80	± 0.70	APPROVED		
80 - < 120	± 1.00	MATERIAL: PA6 GF 30%		
> 120	± 1.20	WEIGHT RANGE : 28 - 48 grams		
-	-	COLOUR : RAL 7044 (SILK GREY)		
-	-	THIRD ANGLE PROJECTION		
-	-			
-	-			
WARPAGE = ± 5 mm				
THE MAXIMUM ALLOWABLE DEVIATION FOR ANY ANGLE IS ± 2°		ALL DIMENSIONS ARE IN mm (MILLIMETERS)		

VIVANT SOLUTIONS

VIVANT SOLUTIONS PRIVATE LIMITED,
PLOT NO: 329, SIDCO THIRUMULLAIVOYAL,
CHENNAI, TAMILNADU, INDIA

TITLE: THERMAL BREAK NYLON OMEGA JOINT FOR 55-54 SYSTEM

PART NO: TBNYOJ-55-54

FINISH : SHOT BLASTING

SIZE : A2	SCALE : 2:1	REV : 0

REFERENCE STANDARDS : ISO 286 - IT 13

NOTE		
SL. NO.	NOTE	DESCRIPTION
1	☐	INDICATES INSPECTION DIMENSION

REVISION HISTORY			
REV	DESCRIPTION	DATE	APPROVE

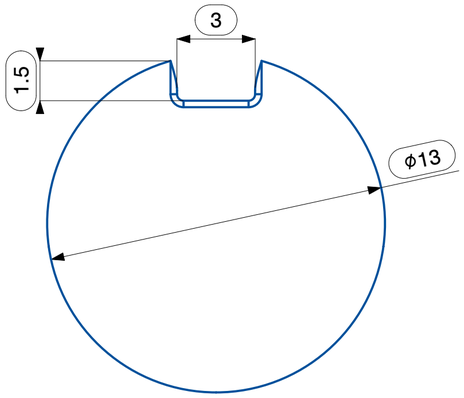

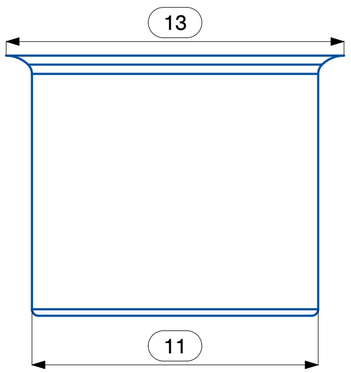

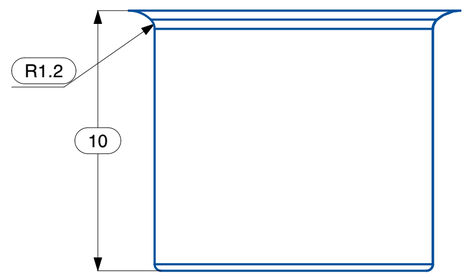

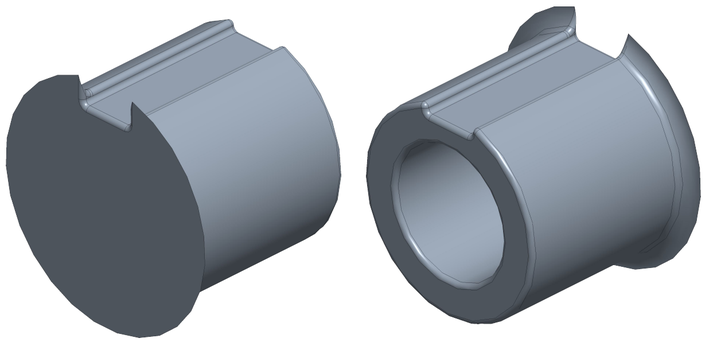

ISO VIEW

TOLERANCE #		APPROVALS		DATE
0.5 - < 11	± 0.30	DRAWN	VISWA	25-10-2023
11 - < 51	± 0.50	CHECKED	KALIL	20-01-2026
51 - < 80	± 0.70	APPROVED		
80 - < 120	± 1.00	MATERIAL: PA6 GF 30%		
> 120	± 1.20	WEIGHT RANGE : 0.7 - 0.9 grams		
-	-	COLOUR : RAL 7044 (SILK GREY)		
-	-	THIRD ANGLE PROJECTION		
-	-			
-	-			
WARPAGE = ± 5 mm				
THE MAXIMUM ALLOWABLE DEVIATION FOR ANY ANGLE IS ± 2°		ALL DIMENSIONS ARE IN mm (MILLIMETERS)		

VIVANT SOLUTIONS

VIVANT SOLUTIONS PRIVATE LIMITED,
PLOT NO: 329, SIDCO THIRUMULLAIVOYAL,
CHENNAI, TAMILNADU, INDIA

TITLE: NYLON CORNER 55-54- CORNER CAP

PART NO: NYC-55-54-CC

FINISH : SHOT BLASTING

SIZE : A2	SCALE : 1:1	REV : 0

REFERENCE STANDARDS : ISO 286 - IT 13

NOTE		
SL. NO.	NOTE	DESCRIPTION
1	☐	INDICATES INSPECTION DIMENSION

REVISION HISTORY			
REV	DESCRIPTION	DATE	APPROVE
1	HEIGHT IS REVISED FROM 50 MM TO 47 MM ON CUSTOMER REQUEST	22-10-2022	

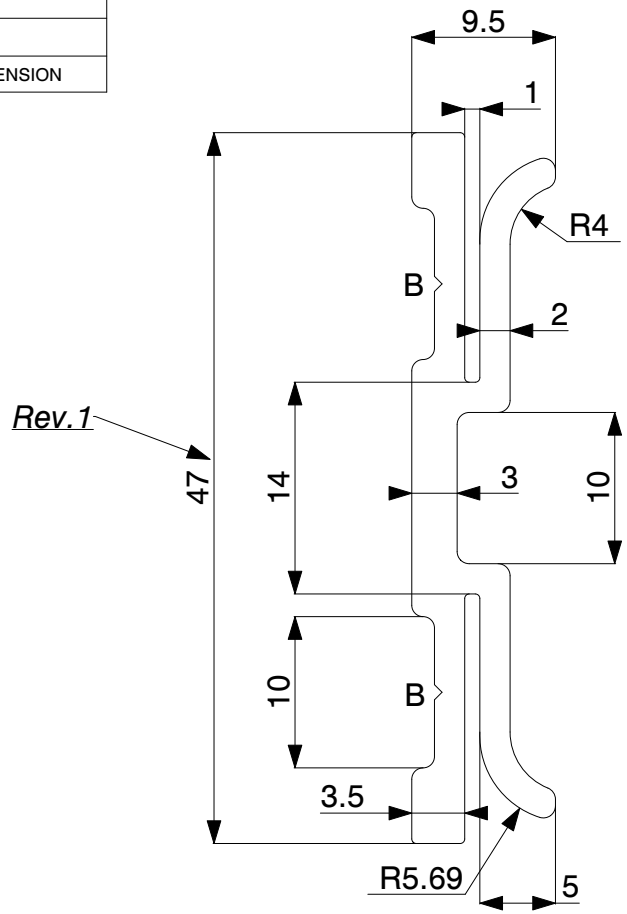

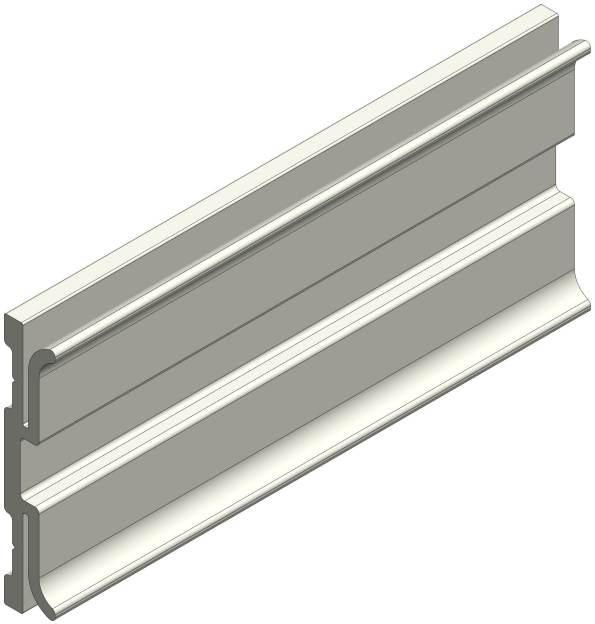

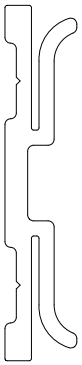

TOLERANCE #		APPROVALS		DATE
0.5 ~ < 10	±0.30	DRAWN	DHANASEKAR	03-04-2026
10 ~ < 25	±0.50	CHECKED	VISWA	03-04-2026
25 ~ < 50	±0.70	APPROVED	KALEEL	
50 ~ < 100	±1.00	MATERIAL: PVC-U		
100 ~ < 150	±1.20	COLOUR : RAL 9016		
THE MAXIMUM ALLOWABLE DEVIATION FOR ANY ANGLE IS ± 2°		FINISH : GLOSSY		
TWIST ALONG THE LENGTH = 3 mm/M		AREA: 205.00 mm²		
STRAIGHTNESS = 5 mm/M		WEIGHT RANGE : 0.269 - 0.299 Kg/m		
FLATNESS : 0.008 X WIDTH		CUT LENGTH: 3000 (±10) mm		
WARPAGE = ±5 mm		WORKING TEMPERATURE: 50 ±5 (°C)		
CORNER & FILLET RADII : <5 - ±0.5mm >5 - ± 10%		ALL DIMENSIONS ARE IN mm (MILLIMETERS) UNTILL UNLESS SPECIFIED		

VIVANT® SOLUTIONS

VIVANT SOLUTIONS PRIVATE LIMITED,
PLOT NO: 329, SIDCO THIRUMULLAIVOYAL,
CHENNAI, TAMILNADU, INDIA

TITLE : THERMAL BREAK PANEL BREAKER FOR 55-54 WSF / 55-54-PLN SYSTEM

PART CODE : TB-PVC-PB-55-54-WSF-PLN	SCALE: 2:1, 1:1
THIRD ANGLE PROJECTION	SIZE : A4
	RIBS: B = 0.5 X 90° (2 PLACES)
# REFERENCE STANDARDS - BSEN-755-9-2008	REV : 1