NOTE		
SL. NO.	NOTE	DESCRIPTION
1	☐	INDICATES INSPECTION DIMENSION

REVISION HISTORY			
REV	DESCRIPTION	DATE	APPROVE

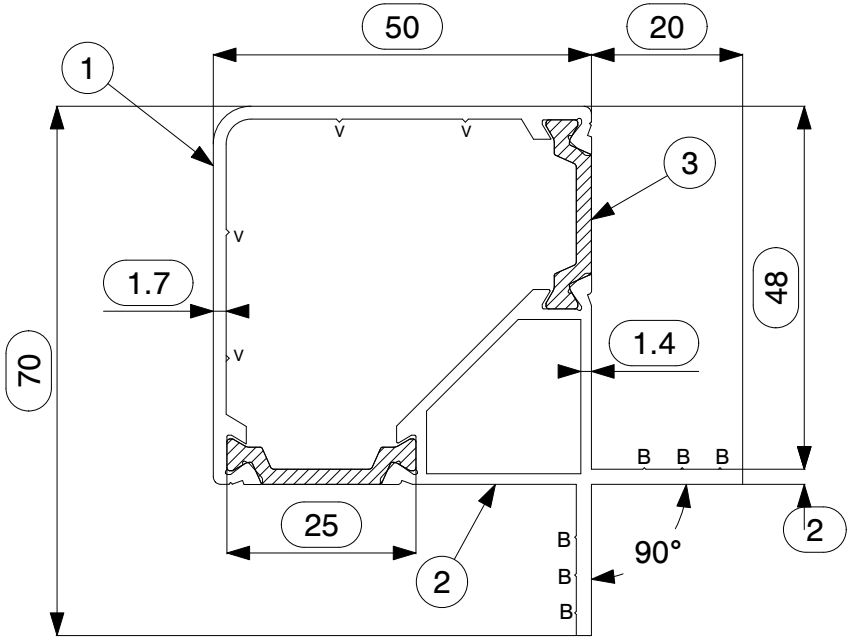

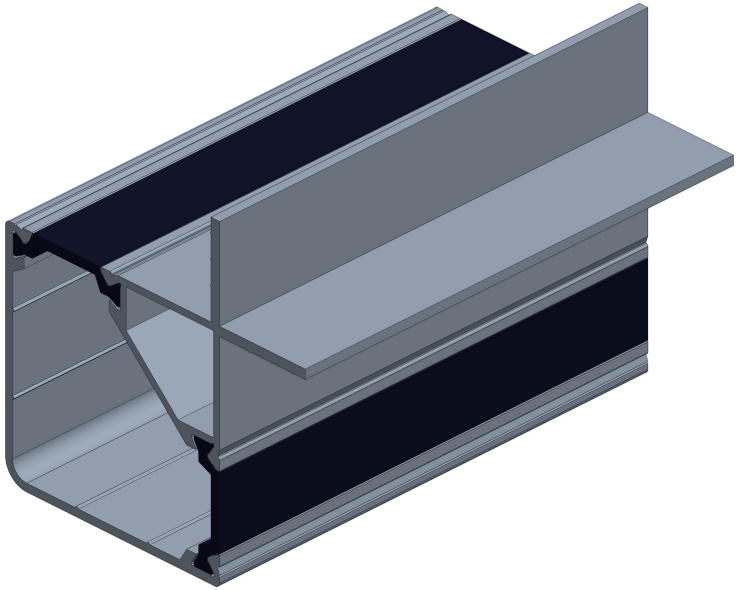

TOLERANCE #	
0.5 ~ < 10	±0.30
10 ~ < 25	±0.50
25 ~ < 50	±0.70
50 ~ < 100	±1.00
100 ~ < 150	±1.20

APPROVALS		DATE
DRAWN	DHANASEKAR	19-01-2026
CHECKED	VISWA	20-01-2026
APPROVED	KALEEL	

MATERIAL: EN AW 6063 - T6

FINISH : MILL (Unless specified)
Based on customer request on finish, below is applicable
FOR ANODIZED : 5-10 MICRONS
FOR POWDER COATED : 60-100 MICRONS

THE MAXIMUM ALLOWABLE DEVIATION FOR ANY ANGLE IS ± 2°

TWIST ALONG THE LENGTH = 3 mm/M

STRAIGHTNESS = 5 mm/M

PERIMETER:
Ext : 247.70 mm
Int : -

AREA: 551.35 mm²

VIVANT® SOLUTIONS

VIVANT SOLUTIONS PRIVATE LIMITED,
PLOT NO: 329, SIDCO THIRUMULLAIVOYAL,
CHENNAI, TAMILNADU, INDIA

TITLE : THERMAL BREAK CORNER PROFILE ASSEMBLY FOR 50-45-90 DEG SYSTEM

PART CODE : TBALC-50-45-90 DEG

NAME	DESCRIPTION	PART NO.	CODE
3	50-45-90 DEG THERMAL BREAK POLY 25-C	VSPL/AHU/1025	TBPL-25-C
2	50-45-90 DEG THERMAL BREAK CORNER INNER	VSPL/AHU/5043	TBALCI-50-48-90 DEG
1	50-45-90 DEG THERMAL BREAK CORNER OUTER	VSPL/AHU/5001	TBALCO-50-48-90 DEG

FLATNESS : 0.008 X WIDTH

SCALE : 1:1

CORNER & FILLET RADII :
< 5 - ±0.5mm
> 5 - ± 10%

CUT LENGTH: 6000 (±10) mm

WEIGHT RANGE : 1.14 -1.44 Kg/m

ALL DIMENSIONS ARE IN mm (MILLIMETERS) UNTILL UNLESS SPECIFIED

THIRD ANGLE PROJECTION

SIZE : A4

RIBS :
B = 0.2 x 90°(6 PLACES)
V = 0.5 x 90°(4 PLACES)

REFERENCE STANDARDS - BSEN-755-9-2008

REV : 0

NOTE		
SL. NO.	NOTE	DESCRIPTION
1	□	INDICATES INSPECTION DIMENSION

REVISION HISTORY			
REV	DESCRIPTION	DATE	APPROVE

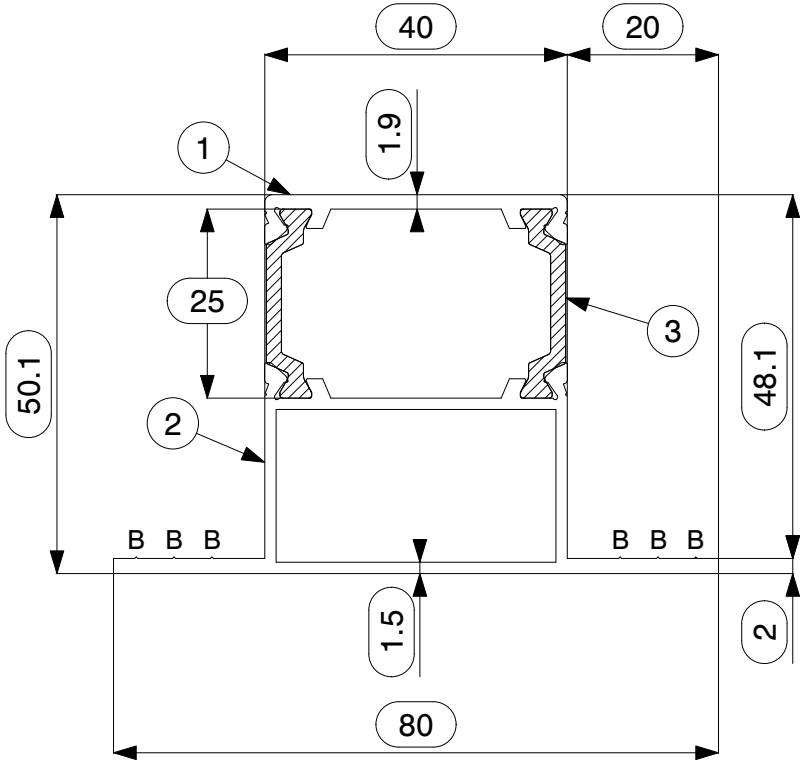

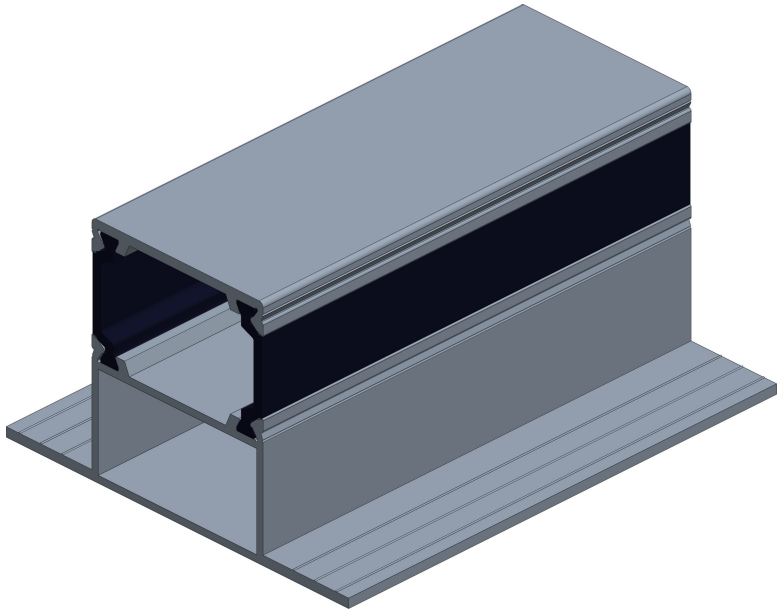

TOLERANCE #	
0.5 ~ < 10	±0.30
10 ~ < 25	±0.50
25 ~ < 50	±0.70
50 ~ < 100	±1.00
100 ~ < 150	±1.20

THE MAXIMUM ALLOWABLE DEVIATION FOR ANY ANGLE IS ± 2°

TWIST ALONG THE LENGTH = 3 mm/M

STRAIGHTNESS = 5 mm/M

APPROVALS		DATE
DRAWN	VISWA	19-01-2026
CHECKED	KALEEL	20-01-2026
APPROVED		

MATERIAL: EN AW 6063 - T6

FINISH : MILL (Unless specified)
Based on customer request on finish, below is applicable
FOR ANODIZED : 5-10 MICRONS
FOR POWDER COATED : 60-100 MICRONS

PERIMETER:
Ext : 230.27 mm
Int : -

AREA: 526.31 mm²

VIVANT® SOLUTIONS

VIVANT SOLUTIONS PRIVATE LIMITED,
PLOT NO: 329, SIDCO THIRUMULLAIVOYAL,
CHENNAI, TAMILNADU, INDIA

TITLE : THERMAL BREAK OMEGA PROFILE ASSEMBLY FOR 50-45 SYSTEM

PART CODE : TBALO-5045

NAME	DESCRIPTION	PART NO.	CODE
3	50-45 THERMAL BREAK POLY 25-C	VSPL/AHU/1025	TBPL-25-C
2	50-45 THERMAL BREAK OMEGA INNER	VSPL/AHU/5004	TBALOI-50-45
1	50-45 THERMAL BREAK OMEGA OUTER	VSPL/AHU/5003	TBALOO-50-45

FLATNESS : 0.008 X WIDTH

SCALE : 1:1

CORNER & FILLET RADII :
< 5 - ±0.5mm
> 5 - ± 10%

CUT LENGTH: 6000 (±10) mm

WEIGHT RANGE : 1.08 - 1.38 Kg/m

ALL DIMENSIONS ARE IN mm (MILLIMETERS) UNTILL UNLESS SPECIFIED

THIRD ANGLE PROJECTION

SIZE : A4

RIBS :
B = 0.2 x 90°(6 PLACES)

REFERENCE STANDARDS - BSEN-755-9-2008

REV : 0

NOTE		
SL. NO.	NOTE	DESCRIPTION
1	☐	INDICATES INSPECTION DIMENSION

REVISION HISTORY			
REV	DESCRIPTION	DATE	APPROVE

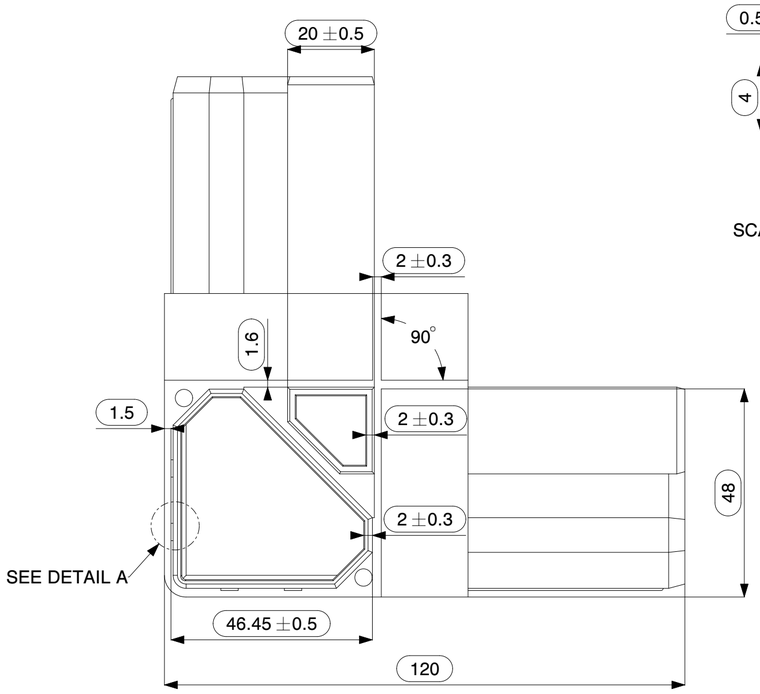

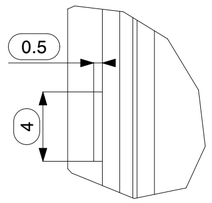

DETAIL A
SCALE 4.000

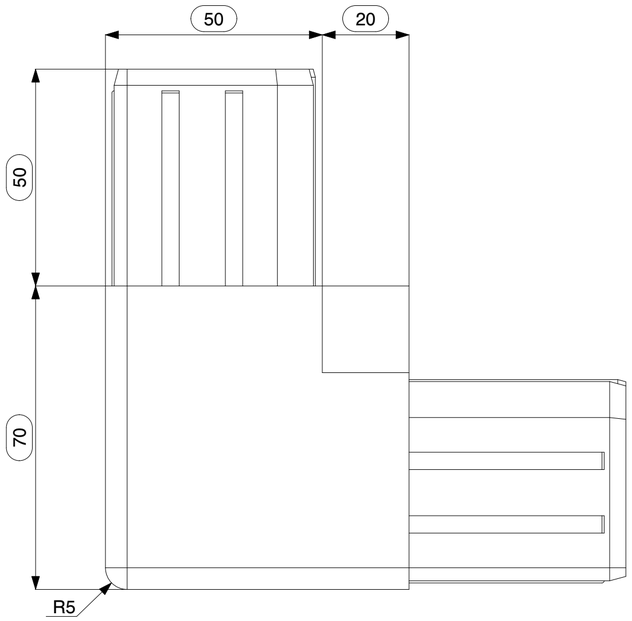

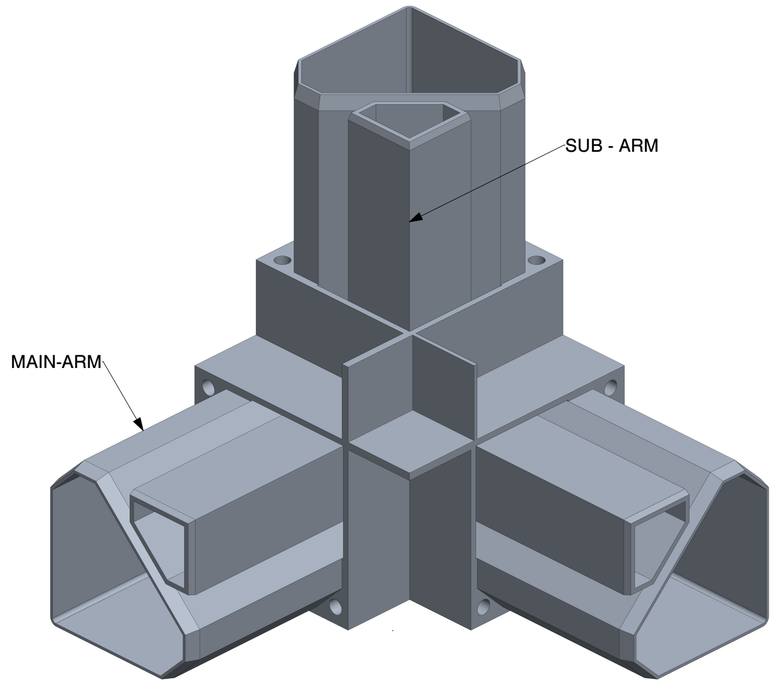

TOLERANCE #		APPROVALS		DATE
0.5 - < 11	± 0.30	DRAWN	DHANASEKAR	06-04-2026
11 - < 51	± 0.50	CHECKED	VISWA	06-04-2026
51 - < 80	± 0.70	APPROVED	KALEEL	
80 - < 120	± 1.00	MATERIAL: PA6 GF 30%		
> 120	± 1.20	WEIGHT RANGE : 194 - 214 grams		
-	-	COLOUR : BLACK		
-	-	THIRD ANGLE PROJECTION		
-	-			
-	-			
WARPAGE = ± 5 mm				
THE MAXIMUM ALLOWABLE DEVIATION FOR ANY ANGLE IS ± 2°		ALL DIMENSIONS ARE IN mm (MILLIMETERS)		

VIVANT SOLUTIONS

VIVANT SOLUTIONS PRIVATE LIMITED,
PLOT NO: 329, SIDCO THIRUMULLAIVOYAL,
CHENNAI, TAMILNADU, INDIA

TITLE: 3 - WAY THERMAL BREAK NYLON CORNER FOR 50-45-90-DEG SYSTEM

PART NO: TBNYC-50-45-90-DEG

FINISH : SHOT BLASTING

SIZE : A2	SCALE : 1:1, 4:1	REV : 0

REFERENCE STANDARDS : ISO 286 - IT 13

NOTE		
SL. NO.	NOTE	DESCRIPTION
1	☐	INDICATES INSPECTION DIMENSION

REVISION HISTORY			
REV	DESCRIPTION	DATE	APPROVE

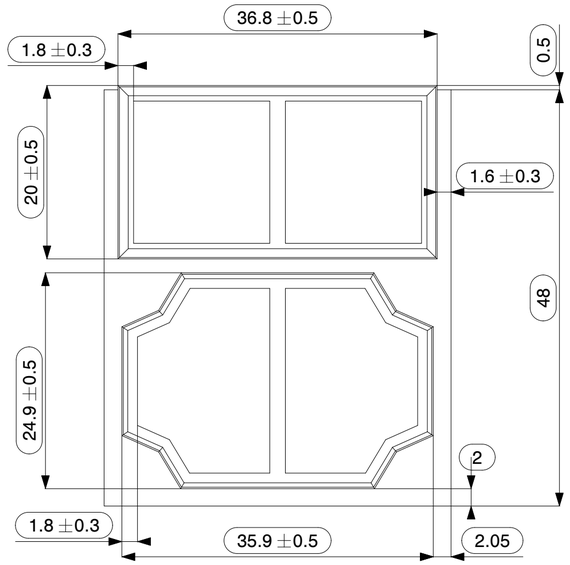

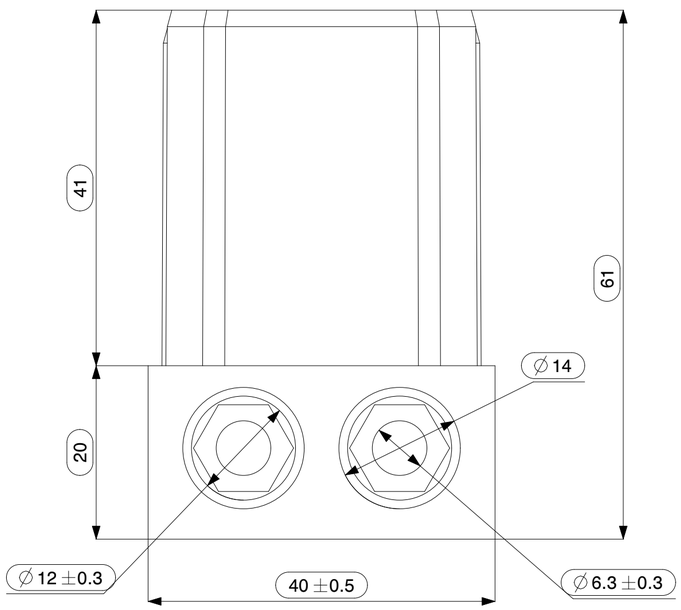

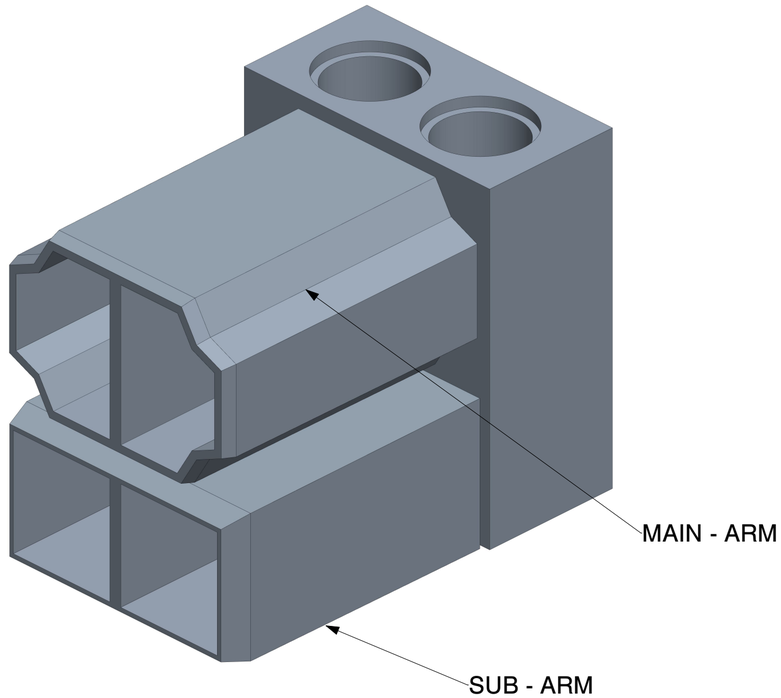

TOLERANCE #		APPROVALS		DATE
0.5 - < 11	± 0.30	DRAWN	VISWA	19-01-2026
11 - < 51	± 0.50	CHECKED	KALEEL	20-01-2026
51 - < 80	± 0.70	APPROVED		
80 - < 120	± 1.00	MATERIAL: PA6 GF 30%		
> 120	± 1.20	WEIGHT RANGE : 36 - 56 grams		
-	-	COLOUR : BLACK		
-	-	THIRD ANGLE PROJECTION		
-	-			
-	-			
WARPAGE = ± 5 mm				
THE MAXIMUM ALLOWABLE DEVIATION FOR ANY ANGLE IS ± 2°		ALL DIMENSIONS ARE IN mm (MILLIMETERS)		

VIVANT® SOLUTIONS

VIVANT SOLUTIONS PRIVATE LIMITED,
PLOT NO: 329, SIDCO THIRUMULLAIVOYAL,
CHENNAI, TAMILNADU, INDIA

TITLE: THERMAL BREAK OMEGA JOINT FOR 50-45 SYSTEM

PART NO: TBNYOJ-50-45

FINISH : SHOT BLASTING

SIZE : A2 | SCALE : 1:1 | REV : 0

REFERENCE STANDARDS : ISO 286 - IT 13

MANUFACTURING NOTE		
SL. NO.	NOTE	DESCRIPTION
1	□	INDICATES INSPECTION DIMENSION

REVISION HISTORY			
REV	DESCRIPTION	DATE	APPROVE

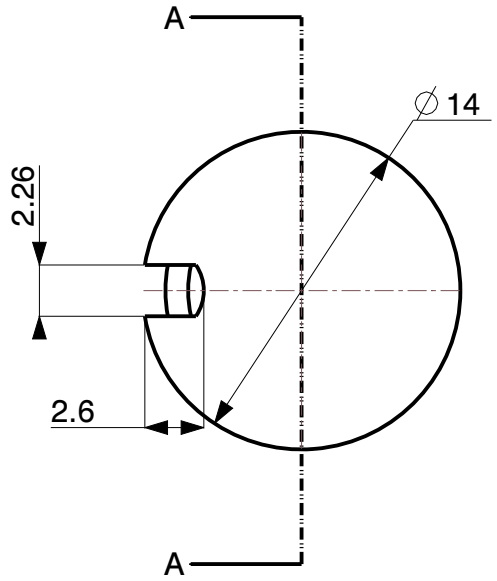

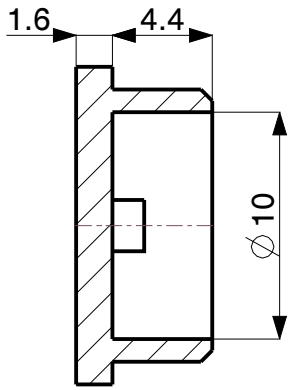

SECTION A-A

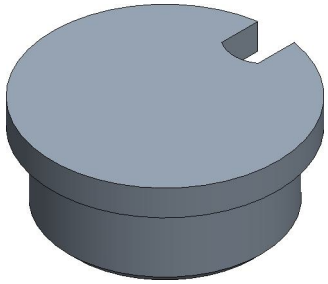

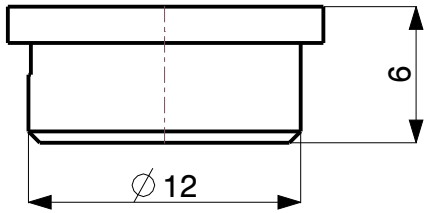

TOLERANCE #		APPROVALS		DATE
0.5 - < 11	± 0.30	DRAWN	DHANASEKAR	02-04-2026
11 - < 51	± 0.50	CHECKED	VISWA	02-04-2026
51 - < 80	± 0.70	APPROVED	KALEEL	
80 - < 120	± 1.00	MATERIAL: PA6 GF 30%		
> 120	± 1.20	WEIGHT : 0.51 grams		
-	-	COLOUR : BLACK		
-	-	THIRD ANGLE PROJECTION		
-	-			
-	-			
-	-			
WARPAGE = ± 5 mm				

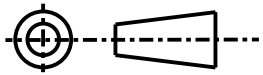

THE MAXIMUM ALLOWABLE DEVIATION FOR ANY ANGLE IS ± 2°

ALL DIMENSIONS ARE IN mm (MILLIMETERS) UNTILL UNLESS SPECIFIED

VIVANT SOLUTIONS PRIVATE LIMITED,
PLOT NO: 329, SIDCO THIRUMULLAIVOYAL,
CHENNAI, TAMILNADU, INDIA

TITLE : THERMAL BREAK OMEGA JOINTER CAP FOR 50-45

PART CODE : TB-NYOJC-50-45

FINISH : SHOT BLASTING

SIZE : A4	SCALE : 3:1	REV : 0

REFERENCE STANDARDS - ISO 286 - IT 13

NOTE		
SL. NO.	NOTE	DESCRIPTION
1	☐	INDICATES INSPECTION DIMENSION

REVISION HISTORY			
REV	DESCRIPTION	DATE	APPROVE

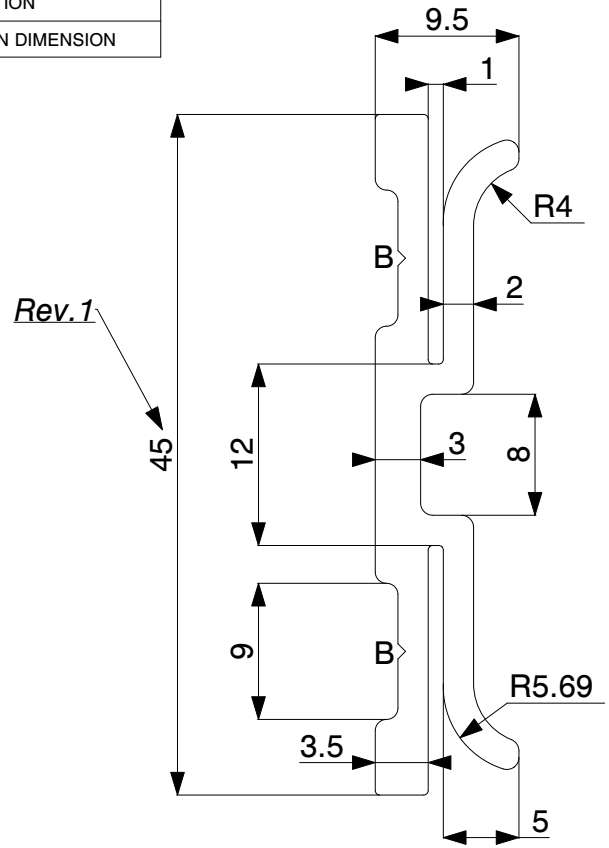

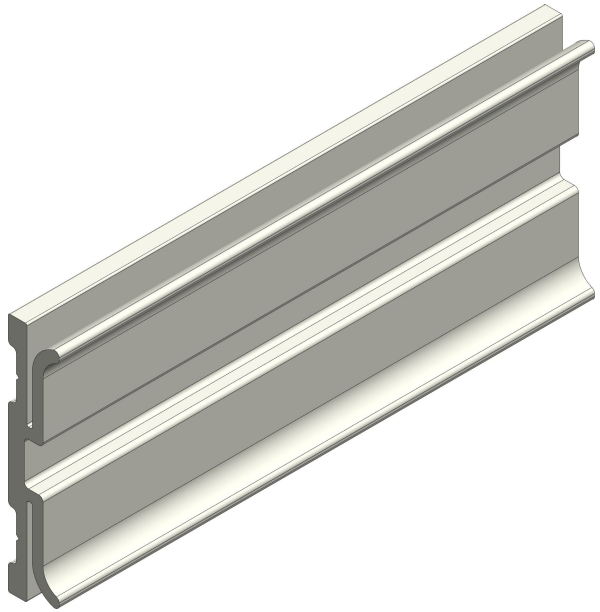

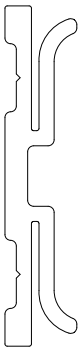

TOLERANCE #		APPROVALS		DATE
0.5 ~ < 10	±0.30	DRAWN	DHANASEKAR	03-04-2026
10 ~ < 25	±0.50	CHECKED	VISWA	03-04-2026
25 ~ < 50	±0.70	APPROVED	KALEEL	
50 ~ < 100	±1.00	MATERIAL: PVC-U		
100 ~ < 150	±1.20	COLOUR : RAL 9016		
THE MAXIMUM ALLOWABLE DEVIATION FOR ANY ANGLE IS ± 2°		FINISH : GLOSSY		
TWIST ALONG THE LENGTH = 3 mm/M		AREA: 202.00 mm²		
STRAIGHTNESS = 5 mm/M		WEIGHT RANGE : 0.265 - 0.295 Kg/m		
FLATNESS : 0.008 X WIDTH		CUT LENGTH: 3000 (±10) mm		
WARPAGE = ±5 mm		WORKING TEMPERATURE: 50 ±5 (°C)		
CORNER & FILLET RADII : <5 - ±0.5mm >5 - ± 10%		ALL DIMENSIONS ARE IN mm (MILLIMETERS) UNTILL UNLESS SPECIFIED		

VIVANT® SOLUTIONS

VIVANT SOLUTIONS PRIVATE LIMITED,
PLOT NO: 329, SIDCO THIRUMULLAIVOYAL,
CHENNAI, TAMILNADU, INDIA

TITLE : THERMAL BREAK PANEL BREAKER FOR 50-45 / 55-54-SF SYSTEM

PART CODE : TB-PVC-PB-55-54-SF/50-45	SCALE: 2:1, 1:1
THIRD ANGLE PROJECTION	SIZE : A4
	RIBS: B = 0.5 X 90° (2 PLACES)
# REFERENCE STANDARDS - BSEN-755-9-2008	REV : 1

NOTE		
SL. NO.	NOTE	DESCRIPTION
1	☐	INDICATES INSPECTION DIMENSION

REVISION HISTORY			
REV	DESCRIPTION	DATE	APPROVE
1	INNER WALL DEPTH HAS BEEN DECREASED AND HIDDEN OF HOLE	16-08-2017	ADITYA

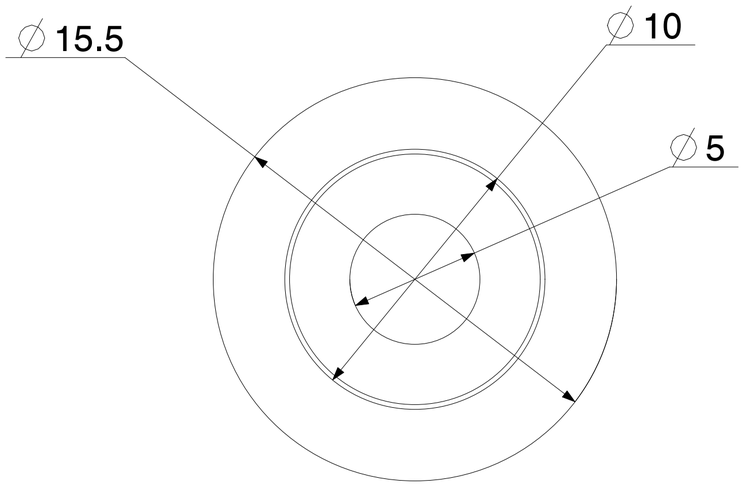

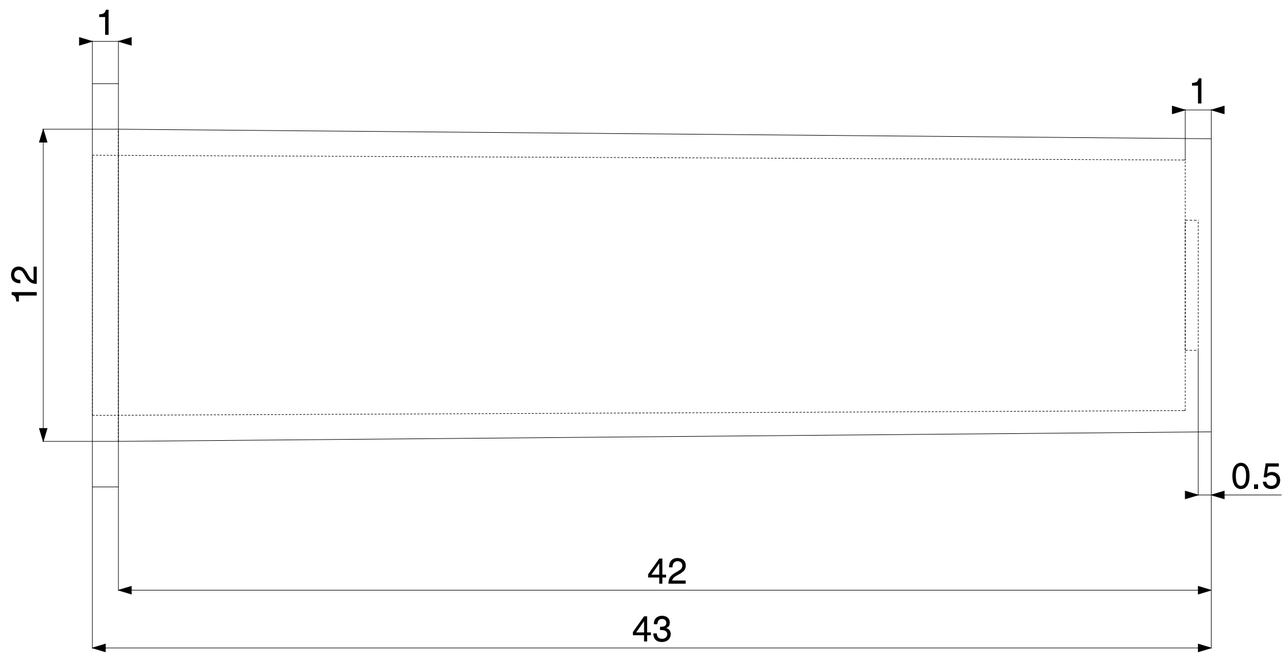

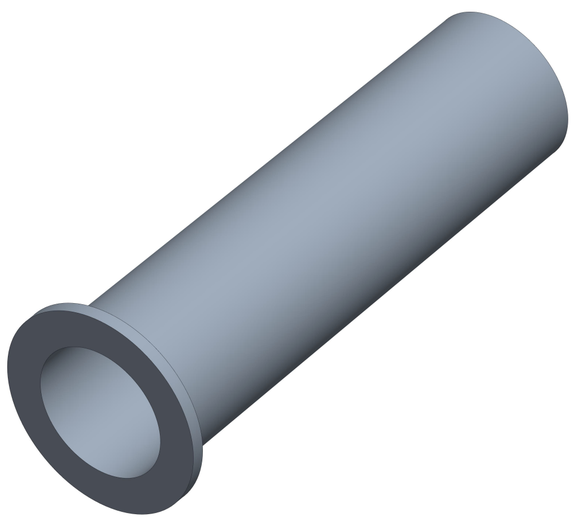

TOLERANCE #		APPROVALS		DATE
0.5 - < 11	± 0.30	DRAWN	DHANASEKAR	30-03-2026
11 - < 51	± 0.50	CHECKED	VISWA	30-03-2026
51 - < 80	± 0.70	APPROVED	KALEEL	
80 - < 120	± 1.00	MATERIAL: PA6 GF 30%		
> 120	± 1.20	WEIGHT : 1.97 grams		
-	-	COLOUR : BLACK		
-	-	THIRD ANGLE PROJECTION		
-	-			
-	-			
WARPAGE = ± 5 mm				
THE MAXIMUM ALLOWABLE DEVIATION FOR ANY ANGLE IS ± 2°		ALL DIMENSIONS ARE IN mm (MILLIMETERS)		

VIVANT SOLUTIONS

VIVANT SOLUTIONS PRIVATE LIMITED,
PLOT NO: 329, SIDCO THIRUMULLAIVOYAL,
CHENNAI, TAMILNADU, INDIA

TITLE: SCREW SLEEVE FOR 45B/46B PANEL SYSTEM MODEL 1

PART NO: NY-SL-B4546-M1

FINISH : SHOT BLASTING

SIZE : A2	SCALE : 6:1	REV : 1

REFERENCE STANDARDS : ISO 286 - IT 13

MANUFACTURING NOTE		
SL. NO.	NOTE	DESCRIPTION
1	□	INDICATES INSPECTION DIMENSION

REVISION HISTORY			
REV	DESCRIPTION	DATE	APPROVE
1	OUTER DIAMETER CHANGED FROM 15 mm TO 16 mm WITH 0.05mm CHAMFER IN THE DIAMETER	19/05/2019	ADITYA

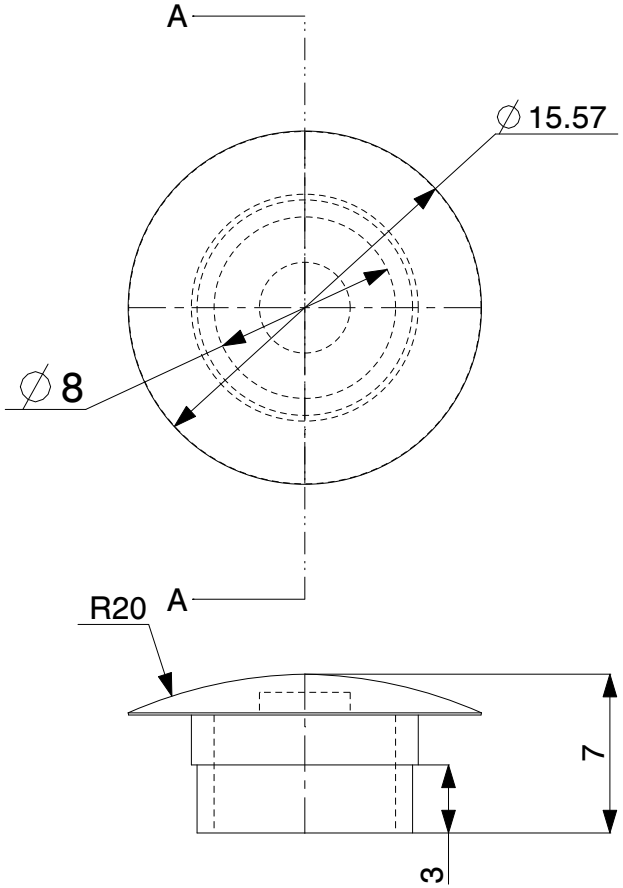

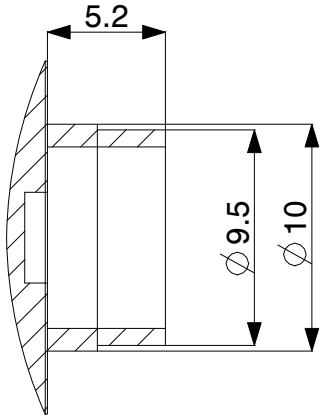

SECTION A-A

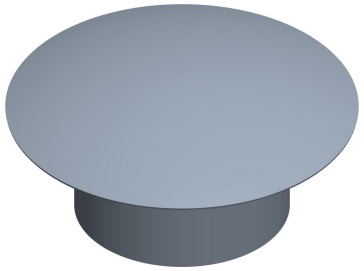

TOLERANCE #		APPROVALS		DATE
0.5 - < 11	± 0.30	DRAWN	DHANASEKAR	02-04-2026
11 - < 51	± 0.50	CHECKED	VISWA	02-04-2026
51 - < 80	± 0.70	APPROVED	KALEEL	
80 - < 120	± 1.00	MATERIAL: PA6 GF 30%		
> 120	± 1.20	WEIGHT : 0.39 grams		
-	-	COLOUR : BLACK		
-	-	THIRD ANGLE PROJECTION		
-	-			
-	-			
-	-			
WARPAGE = ± 5 mm				
THE MAXIMUM ALLOWABLE DEVIATION FOR ANY ANGLE IS ± 2°		ALL DIMENSIONS ARE IN mm (MILLIMETERS) UNTILL UNLESS SPECIFIED		

VIVANT® SOLUTIONS

VIVANT SOLUTIONS PRIVATE LIMITED,
PLOT NO: 329, SIDCO THIRUMULLAIVOYAL,
CHENNAI, TAMILNADU, INDIA

TITLE : SCREW SLEEVE STANDARD COMMON CAP

PART CODE : NYSL-STD-CAP

FINISH : SHOT BLASTING

SIZE : A4	SCALE : 3:1	REV : 1

REFERENCE STANDARDS - ISO 286 - IT 13